MIL-C-38999 SERIES CONNECTORS

For use in military Aerospace, with severe temperature and vibration Environment Quick disconnect and completely mate

ISOTEC

MIL-C-38999

CONNECTORS

CONTENTS

Specifications	2
Polarizing Positions	3
MIL-C-38999 Series I	4
MIL-C-38999 Series II	13
MIL-C-38999 Series III	21
Contact Arrangements	29
Contact & Wire Size	31

● Specifications

- **Operating Temperature Range**

  -65 ° to + 200℃ (85℉ to + 392℉)

- **Durability**

  Minimum of 500 mating cycles.

- **Shock and Vibration Requirements**

  When tested as follows, the connector shall sustain no physical damage or electrical discontinuity exceeding one microsecond.

- **Standard Shock :**

  Pulse of an approximate half sine wave of 300g magnitude with duration of 3miliseconds applied in three axes.

- **Random Vibration**

  (without simulated accessory load) : 41.7 G RMS for 8 hours in two axes, totaling 16 hours at ambient temperature.

- **High Impact Shock : 38999 Ⅰ, Ⅱ**

  When mounted as specified in MIL-S-901, Grade A, a drop of a 400 lb, Hammer from 1 foot, 3 feet and 5 feet applied to connector in three axes, totaling nine impacts.

- **Voltage Rating**

Altitude			Service Rating	
ft.	m	M	I	II
Sea Levels	-	1300	1800	2300
50	15,240	800	1000	1000
70	21,336	800	1000	1000
100	30,480	800	1000	1000

- **Contact Current Rating and Retection**

Contact Size	Current Rating DC Test Amperage	Contact Retention Axial Load lb	N
22D	5.0	10	44.5
20	7.5	15	66.7
16	13.0	25	111.2
12	23.0	25	111.2

- **Materials and Finishes**

	Receptacle	Grounded Plug
Shell	Aluminium alloy	Aluminium alloy
Insulator	High grade plastic	High grade plastic
Contacts	Copper alloy, gold plate	Copper alloy, gold plate
Grommet and Seal	Silicone base elastomer	Silicone base elastomer
Jam Nut	Aluminium alloy	-
Grounding Spring	-	Beryllium copper

- **Vibration :**

  · **Sine**

  Frequency range of 10 to 2000 Hz, in 20 minute sweeps, in 3 axes with the following variations :

  - Duration : 12hours total, 4 hour cycles.
  - Level : Displacement of 0.6 inch [1.5mm](10~100Hz) and acceleration of 30 G' s peak(100~2000Hz) at ambient room temperature.

  · **Random**

  - (without simulated accessory load) : 49.5G RMS for 8 hours in two axes, totaling 16 hours at ambient temperature.

- **R. F. I & E. M. I**

  R. F. I & E. M. I attenuation at the specified frequency meet the requirements of MIL-C-38999.

  R. F. I shielding effectiveness of mated connectors with R. F. I backshells is measured in a triaxial radio frequency leakage fixture.

  E. M. I shielding effectiveness is measured at the interface of mated connectors and tested by the MODE STIR procedure specified in method 3008 of MIL-STD-1344

- Corrosion-resistant shells of aluminium alloy with cadmium over nickel plating withstand a 500 hours salt spray exposure
- Rear release crimp snap-in contacts
- High contact density
- Standard MIL-C-39029 contacts, MIL-I-81969 application tools and MIL-STD-1560 insert density
- Special/custom capabilities
- 100% scoop-proof-Series Ⅰ and Ⅲ
- Lightweight/Low Profile - Series Ⅱ
- Operates under severe high temperature vibration testing through 200℃ engineered for high density circuitry - Series Ⅲ
- Interfacial seal helps prevent electrolytic erosion of contacts - Series Ⅲ
- Superior EMI shielding provides outstanding protection up to 65dB at 10GHz. - Series Ⅲ

Wire Stripping

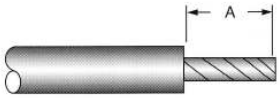

Inch(mm)

Wire Size	A
22D or 22M'	.125(3.18)
20	.188(4.77)
16	.188(4.77)
12	.188(4.77)

● Polarizing Positions

Series Ⅰ

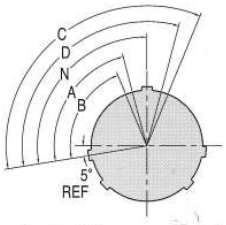

Front face receptacle (plug opposite). Insert arrangement does not rotate with master key-keyway. The master key is rotated to provide shell polarization; the minor keys remain fixed.

Angle of Rotation (Degrees)

Shell Size	Normal	A	B	C	D
9	95°	77°	-	-	113°
11	95°	81°	67°	123°	109°
13	95°	75°	63°	127°	115°
15	95°	74°	61°	129°	116°
17	95°	77°	65°	125°	113°
19	95°	77°	65°	125°	113°
21	95°	77°	65°	125°	113°
23	95°	80°	69°	121°	110°
25	95°	80°	69°	121°	110°

Series Ⅱ

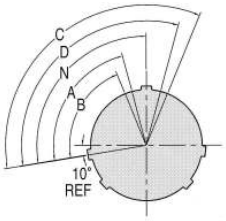

Front face receptacle (plug opposite). Insert arrangement does not rotate with master key-keyway. The master key is rotated to provide shell polarization; the minor keys remain fixed.

Angle of Rotation (Degrees)

Shell Size	Normal	A	B	C	D
9	100°	82°	-	-	118°
11	100°	86°	72°	128°	114°
13	100°	80°	68°	132°	120°
15	100°	79°	66°	134°	121°
17	100°	82°	70°	130°	118°
19	100°	82°	70°	130°	118°
21	100°	82°	70°	130°	118°
23	100°	85°	74°	126°	115°
25	100°	85°	74°	126°	115°

Series Ⅲ

RECEPTACLE
(Front face shown)

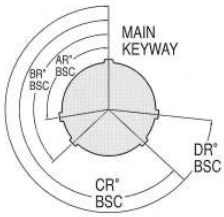

PLUG
(Front face shown)

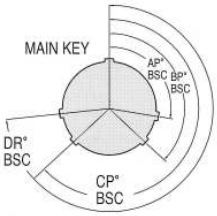

NOTES:

1. All angles are BSC
2. The insert arrangement does not rotate with main key/keyway
3. All minor keys are rotated to provide shell polarization, the master key remains fixed at twelve o' clock position.
4. Polarization is different from Series Ⅰ and Ⅱ

Shell Size	Key & Keyway Arrangement Identification Letter	Key Locations			
		AR° or AP° BSC	BR° or BP° BSC	CR° or CP° BSC	DR° or DP° BSC
9	N	105	140	215	265
	A	102	132	248	320
	B	80	118	230	312
	C	35	140	205	275
	D	64	155	234	304
	E	91	131	197	240
11 and 13 and 15	N	95	141	208	236
	A	113	156	182	292
	B	90	145	195	252
	C	53	156	220	255
	D	119	146	176	298
	E	51	141	184	242
17 and 19	N	80	142	196	293
	A	135	170	200	310
	B	49	169	200	244
	C	66	140	200	257
	D	62	145	180	280
	E	79	153	197	272
21 23 and 25	N	80	142	196	293
	A	135	170	200	310
	B	49	169	200	244
	C	66	140	200	257
	D	62	145	180	280
	E	79	153	197	272

MIL-C-38999

CONNECTORS

CONTENTS

Ordering Information And Specifications	5
MS27466(Wall Mounting Receptacle)	6
MS27467(EMI Grounding Plug)	6
MS27468(Jam Nut Receptacle)	7
MS27496(Box Mount Receptacle)	7
MS27505(Rear Box Mount Receptacle)	8
MS27656(Rear Wall Mount Receptacle)	8
Contacts, Sealing Plugs and Assembly Tools	9
MIL-C-38999 Series I Hermetic Connectors	10

● Ordering Information And Specifications

MS27467 T 17 A 35 S A

- MS NUMBER SHELL STYLE
- CLASS
- SHELL SIZE
- HARDWARE FINISH
- CONTACT ARRANGEMENT
- CONTACT STYLE
- SHELL KEYING POSITION

- **MS Number Shell Style**

MS27466 - Wall Mounting Receptacle
MS27468 - Jam Nut Receptacle
MS27467 - Grounded plug
MS27656 - Wall Mounting Receptacle (back panel mounting)
MS27505 - Box Mounting Receptacle (back panel Class E)

- **Class**

E - Environment-resistant with accessory threads and teeth, except MS27505(without rear accessory) MS27466-Wall Mounting Receptacle
P - Environment-resistant with straight potting cup accessories.
T - Environment-resistant with accessory threads and teeth, except MS27505(without rear accessory) (Class T not applicable to MS27505)

- **Shell Size**

A	B	C	D	E	F	G	H	J
9	11	13	15	17	19	21	23	25

- **Hardware Finish Standard**

A - Bright cadmium over electroless nickel plate, -85℉ to +302℉ (-65℃ to + 150℃)
B - Olive drab cadmium over electroless nickel plate, -85℉ to +347℉ (-65℃ to + 175℃)
F - Electroless nickel, -85℉ to +392℉ (-65℃ to + 200℃)

- **Contacts Arrangement**

MIL-C-38999 Series Ⅰ

- **Contacts Style**

P - Pin *A - Less Pin Contact
S - Socket *B - Less Socket Contact

*Used only when other than power contacts are to be installed (i. e. shielded. thermocouple. etc.)

- **Shell Keying Position**

A, B, C, D. (Not required for normal)
Note : To order MS connectors less standard power contacts, purchase order must state "Less Contacts."

- **Operating Temperature Range**

-65 ° to + 200℃ (85℉ to + 392℉)

- **Durability**

Minimum of 500 mating cycles.

- **Shock and Vibration Requirements**

When tested as follows, the connector shall sustain no physical damage or electrical discontinuity exceeding one microsecond.

- **Standard Shock :**

Pulse of an approximate half sine wave of 300g magnitude with duration of 3miliseconds applied in three axes.

- **Random Vibration**

(without simulated accessory load) : 41.7 G RMS for 8 hours in two axes, totaling 16 hours at ambient temperature.

- **High Impact Shock : 38999 Ⅰ Ⅱ**

When mounted as specified in MIL-S-901, Grade A, a drop of a 400 lb, Hammer from 1 foot, 3 feet and 5 feet applied to connector in three axes, totaling nine impacts.

- **Vibration :**

· **Sine**

Frequency range of 10 to 2000 Hz, in 20 minute sweeps, in 3 axes with the following variations :
- Duration : 12hours total, 4 hour cycles.
- Level : Displacement of 0.6 inch [1.5mm](10~100Hz) and acceleration of 30 G's peak(100~2000Hz) at ambient room temperature.

· **Random**

- (without simulated accessory load) : 49.5G RMS for 8 hours in two axes, totaling 16 hours at ambient temperature.

- **R. F. I & E. M. I**

R. F. I & E. M. I attenuation at the specified frequency meet the requirements of MIL-C-38999.
R. F. I shielding effectiveness of mated connectors with R. F. I backshells are measured in a triaxial radio frequency leakage fixture.
E. M. I shielding effectiveness is measured at the interface of mated connectors and tested by the MODE STIR procedure specified in method 3008 of MIL-STD-1344

● MS27466 Wall Mount Receptacle

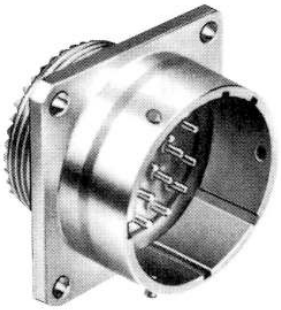

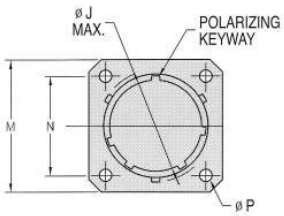

MS 27466

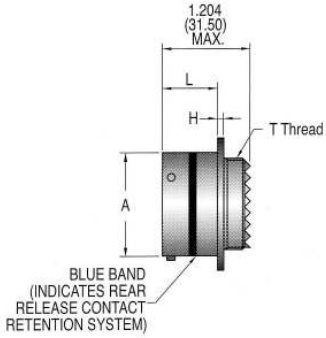

Inch(mm)

Shell Size	A Dia. Max.	H Max.	J Dia Max.	L Max.	M Max.	N T.P.	P Dia. Max.	T Thread
9	.573(14.55)	.100(2.54)	.662(16.81)	.632(16.05)	.958(24.33)	.719(18.26)	.138(3.51)	7/16-28UNEF-2A
11	.701(17.81)	.100(2.54)	.810(20.57)	.632(16.05)	1.051(26.70)	.812(20.62)	.138(3.51)	9/16-24UNEF-2A
13	.851(21.62)	.100(2.54)	.960(24.38)	.632(16.05)	1.145(29.08)	.906(23.01)	.138(3.51)	11/16-24UNEF-2A
15	.976(24.79)	.100(2.54)	1.085(27.56)	.632(16.05)	1.239(31.47)	.969(24.61)	.138(3.51)	13/16-20UNEF-2A
17	1.101(27.97)	.100(2.54)	1.210(30.73)	.632(16.05)	1.332(33.83)	1.062(26.97)	.138(3.51)	15/16-20UNEF-2A
19	1.208(30.68)	.100(2.54)	1.317(33.45)	.632(16.05)	1.458(37.03)	1.156(29.36)	.138(3.51)	1-1/16-18UNEF-2A
21	1.333(33.86)	.130(3.30)	1.442(33.63)	.602(15.29)	1.582(40.18)	1.250(31.75)	.138(3.51)	1-3/16-18UNEF-2A
23	1.458(37.03)	.130(3.30)	1.567(39.80)	.602(15.29)	1.708(43.38)	1.375(34.93)	.157(3.99)	1-5/16-18UNEF-2A
25	1.583(40.21)	.130(3.30)	1.692(42.98)	.602(15.29)	1.832(46.53)	1.500(38.10)	.157(3.99)	1-7/16-18UNEF-2A

● MS27467 EMI Grounding Plug

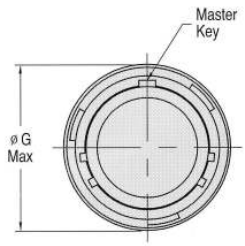

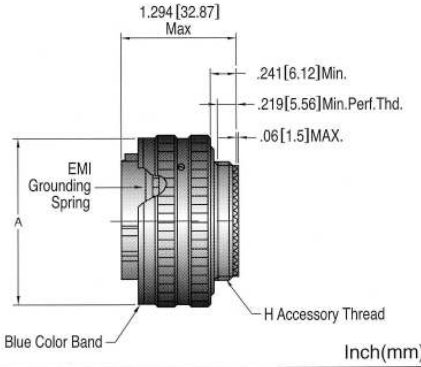

Inch(mm)

Shell Size	A Max.	G Max.	H Thread
9	.585(14.86)	.859(21.82)	7/16-28UNEF-2A
11	.717(18.21)	.984(24.99)	9/16-24UNEF-2A
13	.866(22.00)	1.156(29.36)	11/16-24UNEF-2A
15	.990(25.15)	1.281(32.54)	13/16-20UNEF-2A
17	1.115(28.32)	1.406(35.71)	15/16-20UNEF-2A
19	1.222(31.04)	1.516(38.51)	1-1/16-18UNEF-2A
21	1.347(34.21)	1.641(41.68)	1-3/16-18UNEF-2A
23	1.472(37.39)	1.766(44.86)	1-5/16-18UNEF-2A
25	1.597(40.56)	1.891(48.03)	1-7/16-18UNEF-2A

● MS27468 Jam Nut Receptacle

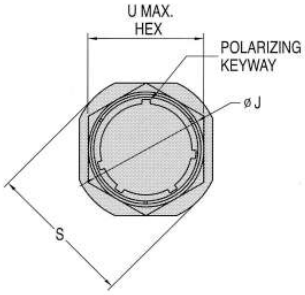

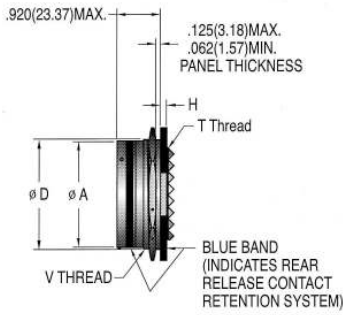

MS 27468

Inch(mm)

Shell Size	A Dia. Max.	D Max.	H Max.	J Dia. Max.	S Dia. Max.	T Thread	U Max. Hex.	V Thread Class 2A
9	.573(14.55)	.655(16.64)	.120(3.05)	.662(16.81)	1.204(30.58)	7/16-28UNEF-2A	.892(22.66)	11/16-24UNEF
11	.701(17.81)	.755(19.18)	.120(3.05)	.810(20.57)	1.391(35.33)	9/16-24UNEF-2A	1.017(25.83)	13/16-24UNEF
13	.851(21.62)	.942(23.93)	.120(3.05)	.960(24.38)	1.516(38.51)	11/16-24UNEF-2A	1.205(30.61)	1-20UNEF
15	.976(24.79)	1.066(27.08)	.120(3.05)	1.085(27.56)	1.641(41.68)	13/16-20UNEF-2A	1.329(33.76)	1-1/8-18UNEF
17	1.101(27.97)	1.191(30.25)	.120(3.05)	1.210(30.73)	1.766(44.86)	15/16-20UNEF-2A	1.455(36.96)	1-1/4-18UNEF
19	1.208(30.68)	1.316(33.43)	.151(3.84)	1.317(33.45)	1.954(49.63)	1-1/16-18UNEF-2A	1.579(40.11)	1-3/8-18UNEF
21	1.333(33.86)	1.441(36.60)	.151(3.84)	1.442(33.63)	2.078(52.78)	1-3/16-18UNEF-2A	1.705(43..1)	1-1/2-18UNEF
23	1.458(37.03)	1.566(39.78)	.151(3.84)	1.567(39.80)	2.204(55.98)	1-5/16-18UNEF-2A	1.829(46.46)	1-5/8-18UNEF
25	1.583(40.21)	1.691(42.95)	.151(3.84)	1.692(42.98)	2.328(59.13)	1-7/16-18UNEF-2A	2.017(51.23)	1-3/4-18UNS

● MS27496 Box Mount Receptacle

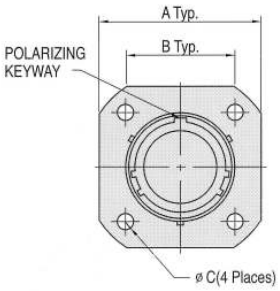

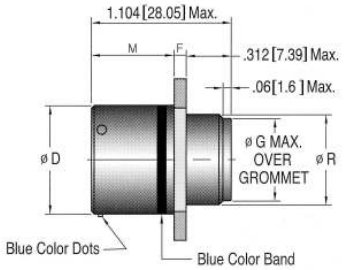

MS27496

Inch(mm)

Shell Size	A ±.020 (±0.51)	B ±.004 (±0.10)	C +.010(+0.25) -.005(-0.13)	D +.001(+0.03) -.005(-0.13)	F +.015(+0.38) -.000(-0.00)	G Max.	M +.000(+0.00) -.005(-0.13)	R Max.
9	**.938** 23.83	**.719** 18.26	**.128** 3.25	**.572** 14.53	**0.85** 2.16	.299 7.60	.632 16.05	.469 11.92
11	**1.031** 26.19	**.812** 20.62	**.128** 3.25	**.700** 17.78	**0.85** 2.16	.427 1085	.632 16.05	.594 15.09
13	**1.125** 28.58	**.906** 23.01	**.128** 3.25	**.850** 21.59	**0.85** 2.16	.541 13.75	.632 16.05	.719 18.27
15	**1.129** 30.96	**.969** 24.61	**.128** 3.25	**.975** 24.77	**0.85** 2.16	.666 16.92	.632 16.05	.844 21.44
17	**1.312** 33.32	**1.062** 26.97	**.128** 3.25	**1.100** 27.94	**0.85** 2.16	.791 20.10	.632 16.05	.969 24.62
19	**1.438** 36.53	**1.156** 29.36	**.128** 3.25	**1.207** 30.66	**0.85** 2.16	.897 22.79	.632 16.05	1.078 27.39
21	**1.562** 39.67	**1.250** 31.75	**.128** 3.25	**1.332** 33.83	**.115** 2.92	1.022 25.96	.602 15.29	1.203 30.56
23	**1.688** 42.88	**1.375** 34.93	**.147** 3.73	**1.457** 37.01	**.115** 2.92	1.147 29.14	.602 15.29	1.328 33.74
25	**1.812** 46.02	**1.500** 38.10	**.147** 3.73	**1.582** 40.18	**.115** 2.92	1.272 32.31	.602 15.29	1.453 36.91

● MS27505 Rear Box Mount Receptacle

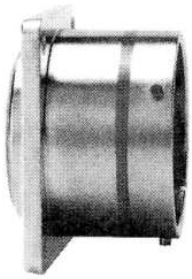

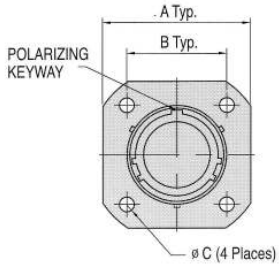

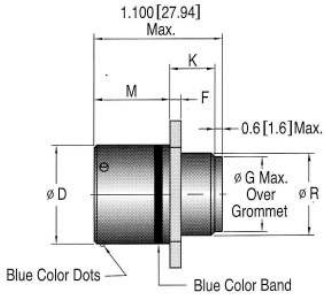

MS27505

Inch
mm

Shell Size	A ±.020 (±0.51)	B ±.004 (±0.10)	C +.010(+0.25) -.005(-0.13)	D +.001(+0.03) -.005(-0.13)	F +.015(+0.38) -.000(-0.00)	G Max.	K Max.	M +.000(+0.00) -.005(-0.13)	R Max.
9	**.938**	**.719**	**.128**	**.572**	**0.85**	**.299**	.219	.820	.547
	23.83	18.26	3.25	14.53	2.16	7.60	5.57	20.83	13.90
11	**1.031**	**.812**	**.128**	**.700**	**0.85**	**.427**	.219	.820	.656
	26.19	20.62	3.25	17.78	2.16	1085	5.57	20.83	16.67
13	**1.125**	**.906**	**.128**	**.850**	**0.85**	**.541**	.219	.820	.828
	28.58	23.01	3.25	21.59	2.16	13.75	5.57	20.83	21.04
15	**1.129**	**.969**	**.128**	**.975**	**0.85**	**.666**	.219	.820	.953
	30.96	24.61	3.25	24.77	2.16	16.92	5.57	20.83	24.21
17	**1.312**	**1.062**	**.128**	**1.100**	**0.85**	**.791**	.219	.820	1.078
	33.32	26.97	3.25	27.94	2.16	20.10	5.57	20.83	27.39
19	**1.438**	**1.156**	**.128**	**1.207**	**0.85**	**.897**	.219	.820	1.203
	36.53	29.36	3.25	30.66	2.16	22.79	5.57	20.83	30.56
21	**1.562**	**1.250**	**.128**	**1.332**	**.115**	**1.022**	.250	.790	1.328
	39.67	31.75	3.25	33.83	2.92	25.96	6.35	20.07	33.74
23	**1.688**	**1.375**	**.147**	**1.457**	**.115**	**1.147**	.250	.790	1.453
	42.88	34.93	3.73	37.01	2.92	29.14	6.35	20.07	36.91
25	**1.812**	**1.500**	**.147**	**1.582**	**.115**	**1.272**	.250	.790	1.578
	46.02	38.10	3.73	40.18	2.92	32.31	6.35	20.07	40.09

● MS27656 Rear Wall Mount Receptacle

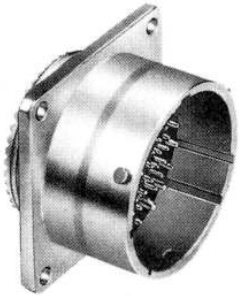

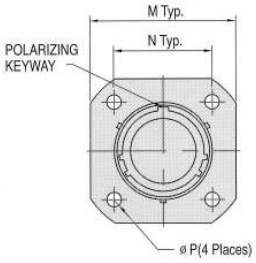

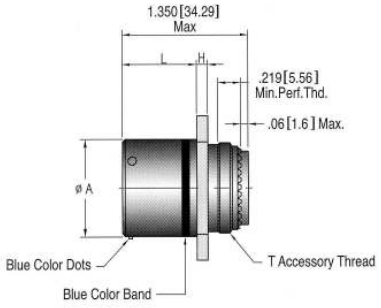

MS27656

Inch(mm)

Shell Size	A Dia. Max.	H Max.	L Max.	M Max.	N T.P.	P Dia.Max.	T Thread
9	.573(14.55)	.100(2.54)	.820(20.83)	.958(24.33)	.719(18.26)	.138(3.51)	7/16-28UNEF-2A
11	.701(17.81)	.100(2.54)	.820(20.83)	1.051(26.70)	.812(20.62)	.138(3.51)	9/16-24UNEF-2A
13	.851(21.62)	.100(2.54)	.820(20.83)	1.145(29.08)	.906(23.01)	.138(3.51)	11/16-24UNEF-2A
15	.976(24.79)	.100(2.54)	.820(20.83)	1.239(31.47)	.969(24.61)	.138(3.51)	13/16-20UNEF-2A
17	1.101(27.97)	.100(2.54)	.820(20.83)	1.332(33.83)	1.062(26.97)	.138(3.51)	15/16-20UNEF-2A
19	1.208(30.68)	.100(2.54)	.820(20.83)	1.458(37.03)	1.156(29.36)	.138(3.51)	1-1/16-18UNEF-2A
21	1.333(33.86)	.130(3.30)	.790(20.07)	1.582(40.18)	1.250(31.75)	.138(3.51)	1-3/16-18UNEF-2A
23	1.458(37.03)	.130(3.30)	.790(20.07)	1.708(43.38)	1.375(34.93)	.157(3.99)	1-5/16-18UNEF-2A
25	1.583(40.21)	.130(3.30)	.790(20.07)	1.832(46.53)	1.500(38.10)	.157(3.99)	1-7/16-18UNEF-2A

● Contacts, Sealing Plugs and Assembly Tools

Contact size	Wire Range AWG	Wire Range mm²	Socket Contacts Military Part No.	Pin Contacts Military Part No.	Sealing plugs Military Part No.
22D	28-22	0.08-0.4	M3929/56-348	M3929/56-360	MS27488-22
20	24-20	0.2-0.6	M3929/56-351	M3929/56-363	MS27488-20
16	20-16	0.5-1.4	M3929/56-352	M3929/56-364	MS27488-16
12	14-12	2-3	M3929/56-353	M3929/56-365	MS27488-12

Crimping Tools

Contact size	Wire Range AWG	Wire Range mm²	Finished Wire Dia. Range Inch	Finished Wire Dia. Range mm²	Contact Type	Crimping Tool	Turret or Positioner
22D	28-22	0-08-0.4	.030-.054	0.76-1.37	P	M22520/2-01	M22520/2-09
					S	M22520/2-01	M22520/2-07
20	24-20	0.2-0.6	.040-.083	1.02-2.11	P&S	M22520/1-01	M22520/1-04
16	20-16	0.5-1.4	.065-.109	1.34-2.62	P&S	M22520/1-01	M22520/1-04
12	14-12	2-3	.097-.142	2.46-4.01	P&S	M22520/1-01	M22520/1-04

Insertion/Extraction Tools

Contact Size	Color Code
22D	Gr./Wh.
20	Rd./Wh.
16	Bl./Wh.
12	Yel./Wh.

Panel Cutouts

Flange Mounted Receptacles

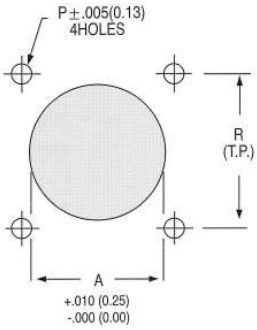

Jam Nut Receptacle

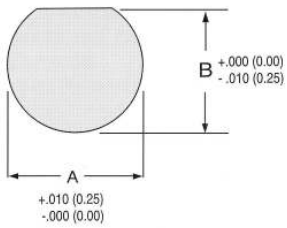

Inch(mm)

Shell Size	A Dia.	P Dia.	R	Mtg. Screw
9	.665(16.89)	.125(3.18)	.719(18.26)	#4
11	.812(20.62)	.125(3.18)	.812(20.62)	#4
13	.965(24.51)	.125(3.18)	.906(23.01)	#4
15	1.085(27.55)	.125(3.18)	.969(24.61)	#4
17	1.210(30.73)	.125(3.18)	1.062(26.97)	#4
19	1.322(33.57)	.125(3.18)	1.156(29.36)	#4
21	1.447(36.75)	.125(3.18)	1.250(31.75)	#4
23	1.569(39.85)	.152(3.86)	1.375(34.93)	#6
25	1.703(43.25)	.152(3.86)	1.500(38.10)	#6

Inch(mm)

Shell Size	A Dia.	B Dia.
9	.700(17.18)	.670(17.02)
11	.825(20.96)	.770(19.59)
13	1.010(25.65)	.955(24.26)
15	1.135(28.83)	1.085(27.56)
17	1.260(32.00)	1.210(30.73)
19	1.385(35.18)	1.335(33.91)
21	1.510(38.35)	1.460(37.08)
23	1.635(41.53)	1.585(40.26)
25	1.760(44.70)	1.710(43.43)

● Hermetic Jam Nut Mounting - MS27470

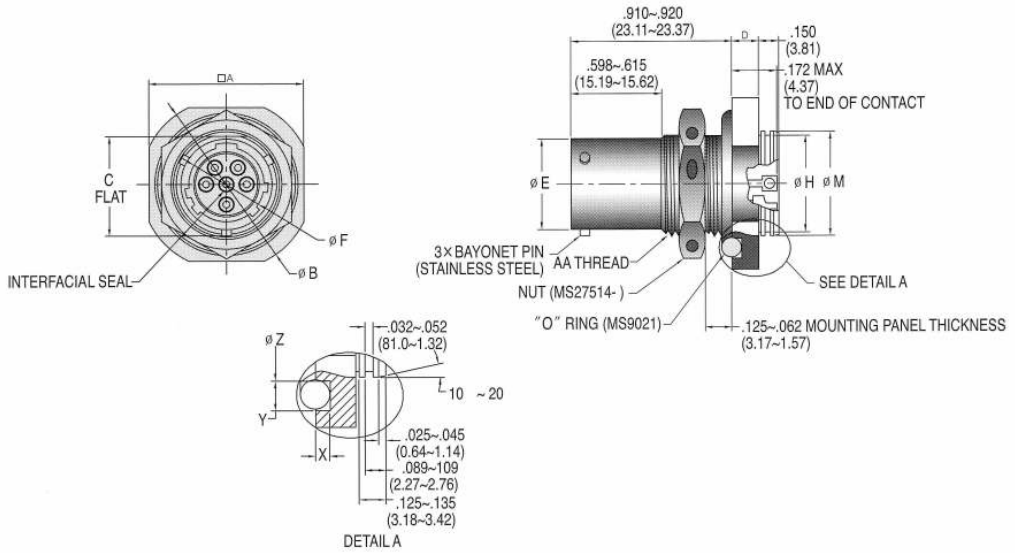

EXPLANATION OF MS PART NUMBER

MS 27470 Y 9 D 35 P A

MILITARY PREFIX

SHELL STYLE
JAM MOUNT. SERIES I
BAYONET COUPLING

CLASS
Y = HERMETIC
H = HERMETIC SPACE GRADE

SHELL SIZE
(SEE TABLE)

ALTERNATE INSERT POSITION
(BLANK) = NORMAL
A. B. C. D

CONTACT STYLE
P = PIN WITH SOLDER CUP
S = SOCKET WITH SOLDER CUP
X = PIN WITH EYELET
Z = SOCKET WITH EYELET
(CONTACTS ARE GOLD PLATED)

INSERT ARRANGEMENT

FINISH
SHELL :
D = FUSED TIN CARBON STEEL (CONDUCTIVE)
E = STAINLESS STEEL. PASSIVATED(CONDUCTIVE)
N = STAINLESS STEL
ELECTROLESS NICKEL DEPOSITED (CONDUCTIVE)

Inch(mm)

Shell Size	AA Thread Class 2A	□A		ø B		C		D		ø E		ø F		ø H		ø M		X		Y		ø Z	
9	.6875-24 UNEF	1.078 1.046	(27.38) (26.57)	1.204 1.172	(30.58) (29.77)	.655 .645	(16.63) (16.38)	.125 .093	(3.17) (2.36)	.573 .567	(14.55) (14.40)	.447 .441	(11.35) (11.20)	.613 .591	(15.57) (15.01)	.653 .642	(16.58) (16.31)	.099 .093	(2.51) (2.36)	.050 .040	(1.27) (1.02)	.783 .727	(19.88) (19.61)
11	.8125-20 UNEF	1.266 1.234	(32.16) (31.34)	1.391 1.359	(35.33) (34.52)	.755 .743	(19.17) (18.92)			.701 .695	(17.81) (17.65)	.575 .569	(14.61) (14.45)	.737 .715	(18.72) (18.16)	.777 .766	(19.73) (19.45)					.971 .960	(24.66) (24.38)
13	1.000-20 UNEF	1.391 1.359	(35.33) (31.52)	1.516 1.484	(38.51) (37.69)	.942 .932	(23.92) (23.67)			.851 .845	(21.62) (21.46)	.692 .686	(17.57) (17.42)	.863 .841	(21.92) (21.36)	.903 .892	(22.93) (22.65)					1.096 1.085	(27.84) (27.55)
15	1.125-18 UNEF	1.516 1.484	(38.51) (37.69)	1.641 1.609	(41.68) (40.87)	1.066 1.056	(27.07) (26.82)			.976 .970	(24.79) (24.64)	.817 .811	(20.75) (20.59)	.989 .967	(25.12) (24.56)	1.029 1.018	(26.14) (25.86)					1.221 1.210	(31.01) (30.73)
17	1.250-18 UNEF	1.641 1.609	(41.68) (40.87)	1.766 1.734	(44.85) (44.04)	1.191 1.181	(30.25) (29.10)			1.101 1.095	(27.97) (27.81)	.942 .936	(23.93) (23.77)	1.113 1.091	(28.27) (27.71)	1.153 1.142	(29.28) (29.00)					1.346 1.335	(34.19) (33.91)
19	1.375-18 UNEF	1.828 1.796	(46.43) (45.62)	1.954 1.922	(49.63) (48.81)	1.316 1.306	(33.43) (33.17)	.156 .124	(3.96) (3.15)	1.208 1.202	(30.68) (30.53)	1.047 1.041	(26.59) (26.44)	1.239 1.217	(31.47) (30.91)	1.279 1.268	(32.48) (32.20)	.146 .140	(3.71) (3.55)	.080 .070	(2.03) (1.17)	1.455 1.444	(36.96) (36.67)
21	1.500-18 UNEF	1.954 1.922	(49.63) (48.82)	2.078 2.046	(52.78) (51.97)	1.441 1.431	(36.60) (36.35)			1.333 1.327	(33.86) (33.70)	1.172 1.166	(29.77) (29.62)	1.363 1.341	(34.62) (34.06)	1.403 1.392	(35.63) (35.35)					1.580 1.569	(40.13) (39.85)
23	1.625-18 UNEF	2.078 2.046	(52.78) (51.98)	2.204 2.172	(55.98) (55.17)	1.266 1.556	(39.77) (39.52)			1.458 1.452	(37.03) (36.88)	1.297 1.291	(32.94) (32.79)	1.489 1.467	(37.82) (37.26)	1.529 1.518	(38.83) (38.55)	.146 .140	(3.71) (3.55)	.080 .070	(2.03) (1.17)	1.705 1.694	(43.31) (43.03)
25	1.750-18 UNS	2.204 2.172	(55.98) (55.17)	2.328 2.296	(59.13) (58.32)	1.691 1.681	(42.95) (42.69)			1.583 1.577	(40.21) (40.05)	1.422 1.416	(36.12) (35.97)	1.613 1.591	(40.97) (40.41)	1.653 1.642	(41.98) (41.71)					1.830 1.819	(43.48) (46.20)

● Hermetic Wall Mounting-MS27469

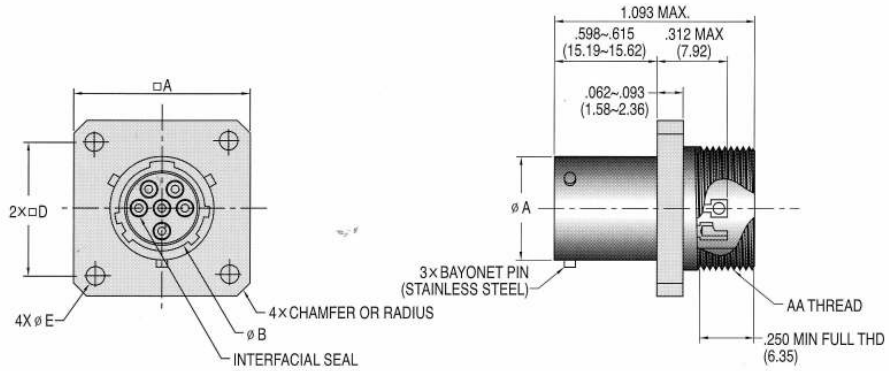

EXPLANATION OF MS PART NUMBER

MS 27469 Y 9 D 35 P A

MILITARY PREFIX

SHELL STYLE
WALL MOUNT SERIES I
BAYONET COUPLING

CLASS
Y = HERMETIC
H = HERMETIC,
SPACE GRADE

SHELL SIZE
(SEE TABLE)

ALTERNATE INSERT POSITION
(BLANK) = NORMAL
W. X. Y. Z

CONTACT STYLE
P = PIN WITH SOLDER CUP
S = SOCKET WITH SOLDER CUP
Z = SOCKET WITH EYELET
(CONTACTS ARE GOLD PLATED)

INSERT ARRANGEMENT

FINISH
D = FUSED TIN CARBON STEEL (CONDUCTIVE)
E = STAINLESS STEEL, PASSIVATED (CONDUCTIVE)
N = STAINLESS STEEL
ELECTROLESS NICKEL DEPOSITED (CONDUCTIVE)

Inch(mm)

Shell Size	BB Thread Class 2A	ø A		ø B		□ C		□ D BSC		ø E	
9	.6875-24 UNEF	.573 .577	(14.55) (14.40)	.447 .441	(11.34) (11.20)	.954 .922	(24.23) (23.42)	.719	(18.26)	.138 .123	(3.50) (3.12)
11	.812-20 UNEF	.701 .695	(17.81) (17.65)	.575 .569	(14.60) (14.45)	1.047 1.015	(26.59) (25.78)	.812	(20.62)		
13	.9375-20 UNEF	.851 .845	(21.62) (21.46)	.692 .686	(17.58) (17.42)	1.141 1.109	(28.98) (28.17)	.906	(23.01)		
15	1.0625-18 UNEF	.976 .970	(24.79) (24.64)	.817 .811	(20.75) (20.60)	1.235 1.296	(31.37) (32.92)	.969	(24.61)		
17	1.1875-18 UNEF	1.101 1.095	(27.97) (27.81)	.942 .936	(23.93) (23.77)	1.328 1.296	(33.73) (32.92)	1.062	(26.97)		
19	1.3125-18 UNEF	1.208 1.202	(30.68) (30.53)	1.047 1.041	(26.59) (26.44)	1.454 1.422	(36.93) (36.12)	1.156	(29.36)		
21	1.4375-18 UNEF	1.333 1.327	(33.68) (33.70)	1.172 1.166	(29.77) (29.62)	1.578 1.546	(40.08) (39.27)	1.250	(31.75)		
23	1.5625-18 UNEF	1.458 1.452	(37.03) (36.38)	1.297 1.291	(32.94) (32.79)	1.7.4 1.672	(43.28) (42.47)	1.375	(34.92)	.157 .142	(3.98) (3.60)
25	1.6875-18 UNEF	1.583 1.577	(40.21) (40.05)	1.422 1.416	(36.12) (35.97)	1.828 1.796	(46.43) (45.62)	1.500	(38.10)		

Miniature MS

CONNECTORS

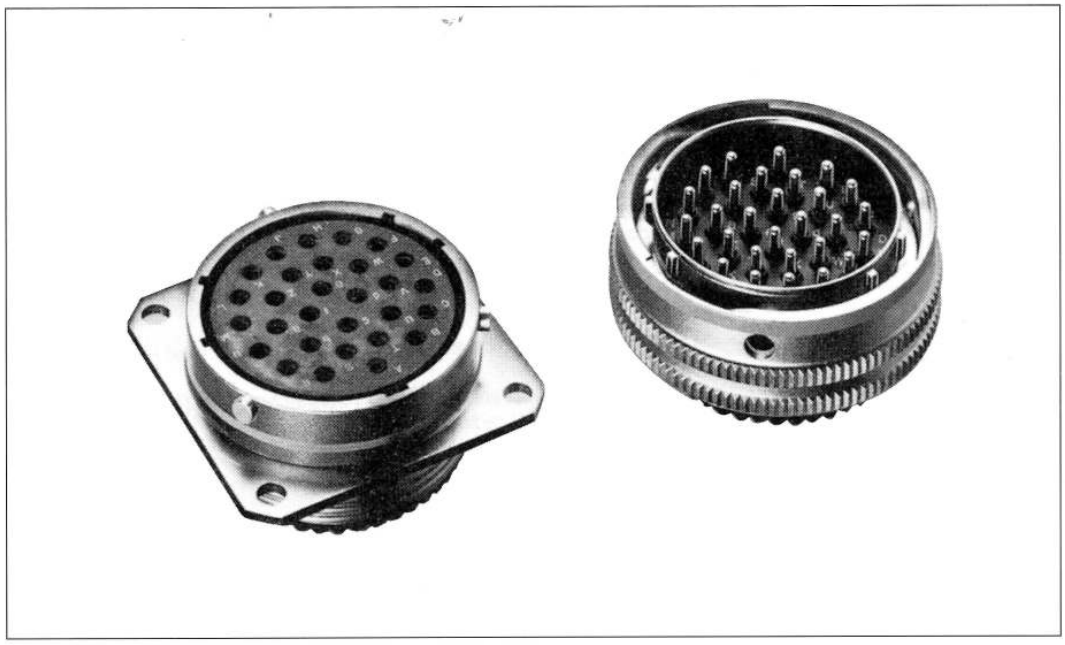

CONTENTS

Ordering Information And Specifications	14
MS27472(Wall Mounting Receptacle)	15
MS27473(Straight Plug)	15
MS27474(Jam Nut Receptacle)	16
MS27484(Grounded Plug)	16
MS27497(Wall Mount Receptacle, Back Panel)	17
MS27490(Box Mounting Receptacle)	17
MS27508(Box Mount Receptacle, Back Panel)	18
MS27513 (Box Mounting Receptacle)	18
MIL-C-38999 Series II Hermetic Connectors	19

● Ordering Information And Specifications

MIL-C- 38999 Series Ⅱ

MS27472 T 17 A 35 S A

- MS NUMBER SHELL STYLE
- CLASS
- SHELL SIZE
- HARDWARE FINSH
- CONTACT ARRANGEMENT
- CONTACT STYLE
- SHELL KEYING POSITION

- **MS Number Shell Style**

MS27472 - Wall Mounting Receptacle
MS27473 - Straight plug
MS27474 - Jam Nut Receptacle
MS27484 - Grounded plug
MS27497 - Wall Mounting Receptacle (back panel mounting)
MS27513 - Box Mounting Receptacle (back panel Class E)
MS27479 - Wall Mounting Receptacle (C Finish)-Inactive, use MS27472
MS27473 - Straight plug (C Finish)-Inactive, use MS27473
MS27474 - Jam Nut Receptacle (C Finish)-Inactive, use MS27474
MS27499 - Box Mounting Receptacle (Class E)
MS27513 - Box Mounting (back pannel mounting) (Class E)

- **Class**

E - Environment-resistant with accessory (without strain relief)
P - Environment-resistant with straight potting cup accessories.
T - Environment-resistant (without rear accessory). (Class T not applicable to MS27499, MS27513, and MS27508).

- **Shell Size**

8	10	12	14	16	18	20	22	24

- **Hardware Finish Standard**

A - MIL-C-38999 Series Ⅰ
B - MIL-C-38999 Series Ⅰ
C - Anodize(non-conductive)
-85℉ to +392℉ (-65℃ to + 200℃)
Not applicable to MS27484
F - MIL-C-38999 Series Ⅰ

- **Contact Arrangements**

MIL-C-38999 Series Ⅱ

- **Contacts Style**

P - Pin *A - Less Pin Contact
S - Socket *B - Less Socket Contact
*Used only when other than power contacts are to be installed (i. e. shielded. thermocouple. etc.)

- **Shell Keying Position**

A, B, C, D. (Not required for normal)

- **Operating Temperature Range**

-65 ° to + 200℃ (85℉ to + 392℉)

- **Durability**

Minimum of 500 mating cycles.

- **Shock and Vibration Requirements**

When tested as follows the connector shall sustain no physical damage or electrical discontinuity exceeding one microsecond.

- **Standard Shock :**

Pulse of an approximate half sine wave of 300g magnitude with duration of 3miliseconds applied in three axes.

- **Random Vibration**

(without simulated accessory load) : 41.7 G RMS for 8 hours in two axes, totaling 16 hours at ambient temperature.

- **High Impact Shock : 38999 Ⅰ, Ⅱ**

When mounted as specified in MIL-S-901, Grade A, a drop of a 400 lb, Hammer from 1 foot, 3 feet and 5 feet applied to connector in three axes, totaling nine impacts.

- **Vibration :**

· **Sine**

Frequency range of 10 to 2000 Hz, in 20 minute sweeps, in 3 axes with the following variations :
- Duration : 12hours total, 4 hour cycles.
- Level : Displacement of 0.6 inch [1.5mm](10~100Hz) and acceleration of 30 G's peak(100~2000Hz) at ambient room temperature.

· **Random**

- (without simulated accessory load) : 49.5G RMS for 8 hours in two axes, totaling 16 hours at ambient temperature.

- **R. F. I & E. M. I**

R. F. I & E. M. I attenuation at the specified frequency meet the requirements of MIL-C-38999.
R. F. I shielding effectiveness of mated connectors with R. F. I backshells is measured in a triaxial radio frequency leakage fixture.
E. M. I shielding effectiveness is measured at the interface of mated connectors and tested by the MODE STIR procedure specified in method 3008 of MIL-STD-1344

● MS27472 Wall Mount Receptacle

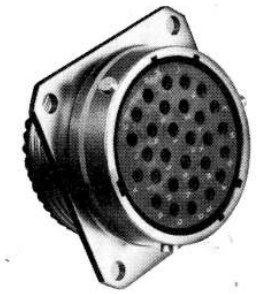

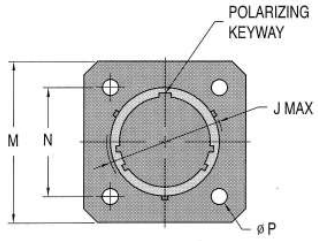

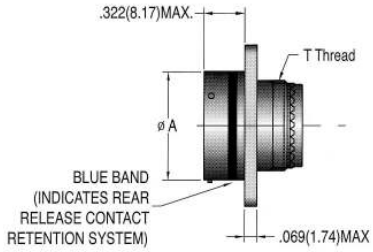

MS 27472

Inch(mm)

Shell Size	A Dia. Max.	J Dia Max.	M Max.	N T.P.	P ±.005 (0.13) -.010 (0.25)	T Thread
8	.474(12.04)	.563(14.30)	.828(21.03)	.594(15.09)	.125(3.18)	7/16-28UNEF-2A
10	.591(15.01)	.680(17.27)	.954(24.23)	.719(18.26)	.125(3.18)	9/16-24UNEF-2A
12	.751(19.08)	.859(21.82)	1.047(26.59)	.812(20.62)	.125(3.18)	11/16-24UNEF-2A
14	.876(22.25)	.984(24.99)	1.141(28.98)	.906(23.01)	.125(3.18)	13/16-20UNEF-2A
16	1.001(25.43)	1.108(28.14)	1.234(31.34)	.969(24.61)	.125(3.18)	15/16-20UNEF-2A
18	1.126(28.60)	1.233(31.32)	1.328(33.73)	1.062(26.97)	.125(3.18)	1-1/16-18UNEF-2A
20	1.251(31.78)	1.358(34.49)	1.453(36.91)	1.156(27.36)	.125(3.18)	1-3/16-18UNEF-2A
22	1.376(34.95)	1.483(37.67)	1.578(39.08)	1.250(31.76)	.125(3.18)	1-5/16-18UNEF-2A
24	1.501(38.13)	1.610(40.89)	1.703(43.26)	1.375(34.92)	.152(3.86)	1-7/16-18UNEF-2A

● MS27473 Straight Plug

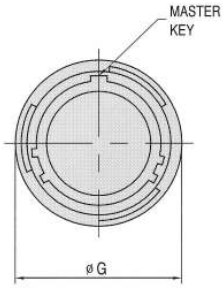

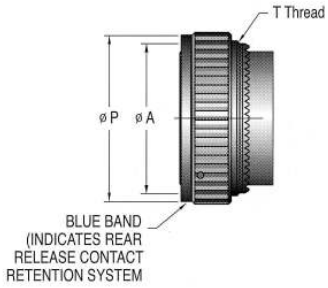

MS 27473

Inch(mm)

Shell Size	A Dia. Max.	G Dia. Max.	P Dia. Max.	T Thread
8	.485(12.32)	.749(19.02)	.630(16.00)	7/16-28UNEF-2A
10	.606(15.39)	.858(21.79)	.752(19.10)	9/16-24UNEF-2A
12	.765(19.43)	1.030(26.16)	.925(23.50)	11/16-24UNEF-2A
14	.890(22.61)	1.155(29.34)	1.050(26.67)	13/16-20UNEF-2A
16	1.014(25.76)	1.280(32.51)	1.172(29.77)	15/16-20UNEF-2A
18	1.140(28.96)	1.405(35.69)	1.304(33.12)	1-1/16-18UNEF-2A
20	1.264(32.11)	1.530(38.86)	1.435(36.45)	1-3/16-18UNEF-2A
22	1.389(35.28)	1.640(40.66)	1.560(39.62)	1-5/16-18UNEF-2A
24	1.514(38.46)	1.765(44.83)	1.688(42.88)	1-7/16-18UNEF-2A

● MS27474 Jam Nut Receptacle

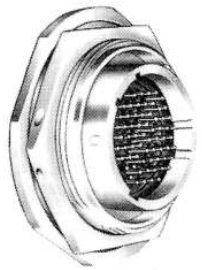

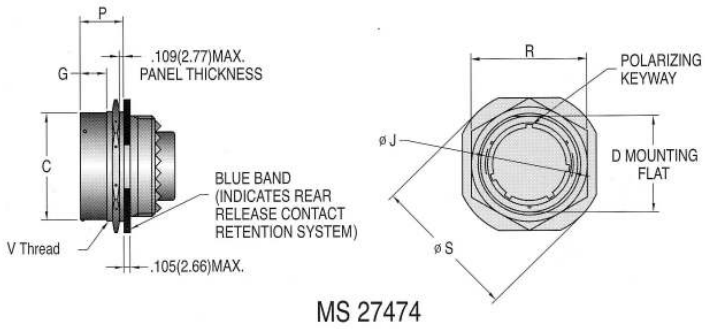

MS 27474

Inch(mm)

Shell Size	C Dia. Max.	D Max.	G Max.	J Dia. Max.	P Dia. Max.	R Max. Hex.	S Dia. Max.	T Thread	V Thread
8	.474(12.04)	.818(20.78)	.145(3.68)	.563(14.30)	.443(11.25)	1.079(27.41)	1.381(35.08)	7/16-28UNEF-2A	7/8-20UNEF-2A
10	.591(15.01)	.942(23.93)	.145(3.68)	.680(17.27)	.443(11.25)	1.205(30.61)	1.506(38.25)	9/16-24UNEF-2A	1-20UNEF-2A
12	.751(19.08)	1.066(27.08)	.145(3.68)	.895(21.82)	.443(11.25)	1.329(33.76)	1.631(41.43)	11/16-24UNEF-2A	1-1/8-18UNEF-2A
14	.876(22.25)	1.191(30.25)	.145(3.68)	.984(24.99)	.443(11.25)	1.455(36.96)	1.756(44.60)	13/16-20UNEF-2A	1-1/4-18UNEF-2A
16	1.001(25.43)	1.321(33.55)	.145(3.68)	1.108(28.14)	.443(11.25)	1.579(40.11)	1.944(49.38)	1-15/16-20UNEF-2A	1-3/8-18UNEF-2A
18	1.126(28.60)	1.441(36.60)	.145(3.68)	1.233(31.32)	.443(11.25)	1.705(43.31)	2.022(51.36)	1-1/16-18UNEF-2A	1-1/2-18UNEF-2A
20	1.251(31.78)	1.566(39.78)	.171(4.34)	1.358(34.49)	.469(11.91)	1.829(46.46)	2.147(54.53)	1-3/16-18UNEF-2A	1-5/8-18UNEF-2A
22	1.376(34.95)	1.691(42.95)	.171(4.34)	1.483(37.67)	.469(11.91)	2.017(51.23)	2.271(57.68)	1-5/16-18UNEF-2A	1-3/4-18UNS-2A
24	1.501(38.13)	1.816(46.13)	.171(4.34)	1.610(40.89)	.469(11.91)	2.142(54.41)	2.396(60.86)	1-7/16-18UNEF-2A	1-7/8-16UNS-2A

● MS27484 Grounded Plug

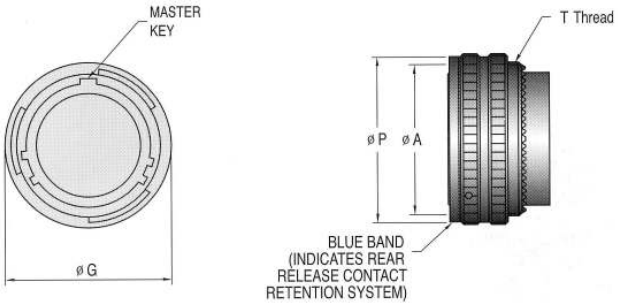

MS 27484

Inch(mm)

Shell Size	A Dia. Max.	G Max.	P Dia. Max.	T Thread
8	.485(12.32)	.749(19.02)	.630(16.00)	7/16-28UNEF-2A
10	.606(15.39)	.858(21.79)	.752(19.10)	9/16-24UNEF-2A
12	.765(19.43)	1.030(26.16)	.925(23.50)	11/16-24UNEF-2A
14	.890(22.61)	1.155(29.34)	1.050(26.67)	13/16-20UNEF-2A
16	1.014(25.76)	1.280(32.51)	1.172(29.77)	15/16-20UNEF-2A
18	1.140(28.96)	1.405(35.69)	1.304(33.12)	1-1/16-18UNEF-2A
20	1.264(32.11)	1.530(38.86)	1.435(36.45)	1-3/16-18UNEF-2A
22	1.389(35.28)	1.640(40.66)	1.560(39.62)	1-5/16-18UNEF-2A
24	1.514(38.46)	1.765(44.83)	1.688(42.88)	1-7/16-18UNEF-2A

● MS27497 Wall Mount Receptacle, Back Panel

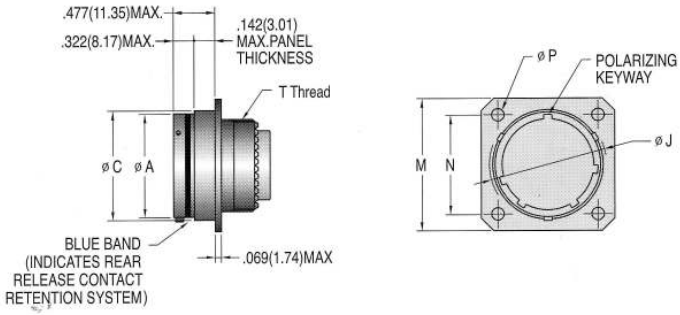

MS 27497

Inch(mm)

Shell Size	A Dia. Max.	C Dia. Max.	J Dia. Max.	M Max.	N T.P.	P +.005 (0.13) -.010 (0.25)	T Thread
8	.474(12.04)	.522(13.26)	.563(14.30)	.828(21.03)	.594(15.09)	.125(3.18)	7/16-28UNEF-2A
10	.591(15.01)	.639(16.23)	.680(17.27)	.954(24.23)	.719(18.26)	.125(3.18)	9/16-24UNEF-2A
12	.751(19.08)	.808(20.52)	.859(21.82)	1.047(26.59)	.812(20.62)	.125(3.18)	11/16-24UNEF-2A
14	.876(22.25)	.935(23.75)	.984(24.99)	1.141(28.98)	.906(23.01)	.125(3.18)	13/16-20UNEF-2A
16	1.001(25.43)	1.058(26.87)	1.108(28.14)	1.234(31.34)	.969(24.61)	.125(3.18)	15/16-20UNEF-2A
18	1.126(28.60)	1.183(30.05)	1.233(31.32)	1.328(33.73)	1.062(26.97)	.125(3.18)	1-1/16-18UNEF-2A
20	1.251(31.78)	1.308(33.22)	1.358(34.49)	1.453(36.91)	1.156(29.36)	.125(3.18)	1-3/16-18UNEF-2A
22	1.376(34.95)	1.433(36.40)	1.483(37.67)	1.578(40.08)	1.250(31.75)	.125(3.18)	1-5/16-18UNEF-2A
24	1.501(38.13)	1.568(39.83)	1.610(40.89)	1.703(43.26)	1.375(34.93)	.152(3.86)	1-7/16-18UNEF-2A

● MS27499 Box Mounting Receptacle

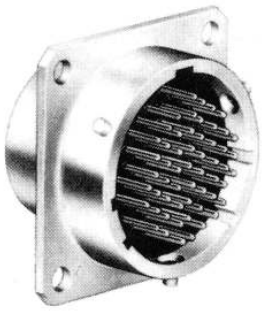

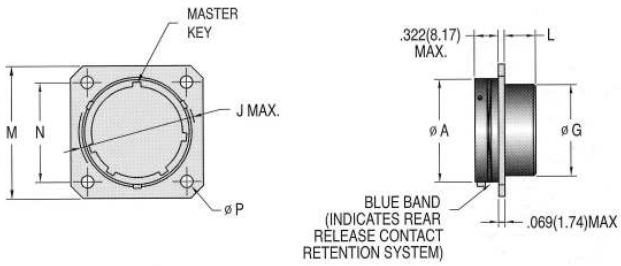

MS 27499

Inch(mm)

Shell Size	A Dia. Max.	G Dia. Max.	J Dia. Max.	L Max.	M Max.	N T.P.	P +.005 (0.13) -.010 (0.25)
8	.474(12.04)	.421(10.69)	.563(14.30)	.312(7.92)	.828(21.03)	.594(15.09)	.125(3.18)
10	.591(15.01)	.542(13.77)	.680(17.27)	.312(7.92)	.954(24.23)	.719(18.26)	.125(3.18)
12	.751(19.08)	.667(16.94)	.859(21.82)	.312(7.92)	1.047(26.59)	.812(20.62)	.125(3.18)
14	.876(22.25)	.791(20.09)	.984(24.99)	.312(7.92)	1.141(28.98)	.906(23.01)	.125(3.18)
16	1.001(25.43)	.916(23.27)	1.108(28.14)	.312(7.92)	1.234(31.34)	.969(24.61)	.125(3.18)
18	1.126(28.60)	1.034(26.26)	1.233(31.32)	.312(7.92)	1.328(33.73)	1.062(26.97)	.125(3.18)
20	1.251(31.78)	1.158(29.41)	1.358(34.49)	.312(7.92)	1.453(36.91)	1.156(27.36)	.125(3.18)
22	1.376(34.95)	1.283(32.59)	1.483(37.67)	.312(7.92)	1.578(39.08)	1.250(31.76)	.125(3.18)
24	1.501(38.13)	1.408(35.76)	1.610(40.89)	.312(7.92)	1.703(43.26)	1.375(34.92)	.152(3.86)

● MS27508 Box Mount Receptacle, Back Panel

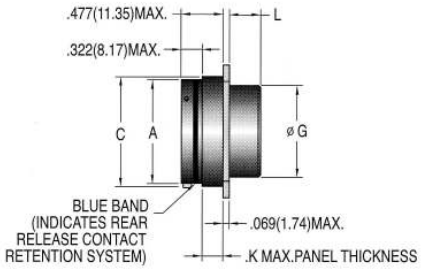

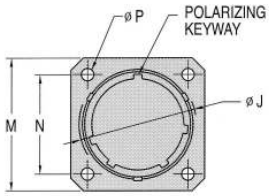

MS 27508

Inch(mm)

Shell Size	A Dia. Max.	C Dia. Max.	G Dia. Max.	J Dia. Max.	K Max.	L Max.	M Max.	N T.P.	P +.005 (0.13) -.010 (0.25)
8	.474(12.04)	.522(13.26)	.421(10.69)	.563(14.30)	.147(3.73)	.185(4.70)	.828(21.03)	.594(15.09)	.125(3.18)
10	.591(15.01)	.639(16.23)	.542(13.77)	.680(17.27)	.152(3.86)	.185(4.70)	.954(24.23)	.719(18.26)	.125(3.18)
12	.751(19.08)	.808(20.52)	.667(16.94)	.859(21.82)	.152(3.86)	.185(4.70)	1.047(26.59)	.812(20.62)	.125(3.18)
14	.876(22.25)	.935(23.75)	.791(20.09)	.984(24.99)	.152(3.86)	.185(4.70)	1.141(28.98)	.906(23.01)	.125(3.18)
16	1.001(25.43)	1.058(26.87)	.916(23.27)	1.108(28.14)	.152(3.86)	.185(4.70)	1.234(31.34)	.969(24.61)	.125(3.18)
18	1.126(28.60)	1.183(30.05)	1.034(26.26)	1.233(31.32)	.152(3.86)	.185(4.70)	1.328(33.73)	1.062(26.97)	.125(3.18)
20	1.251(31.78)	1.308(33.22)	1.158(29.41)	1.358(34.49)	.179(4.55)	.185(4.70)	1.453(36.91)	1.156(27.36)	.125(3.18)
22	1.376(34.95)	1.433(36.40)	1.283(32.59)	1.483(37.67)	.179(4.55)	.185(4.70)	1.578(39.08)	1.250(31.76)	.125(3.18)
24	1.501(38.13)	1.568(39.83)	1.408(35.76)	1.610(40.89)	.179(4.55)	.185(4.70)	1.703(43.26)	1.375(34.92)	.152(3.86)

● MS27513 Box Mounting Receptacle

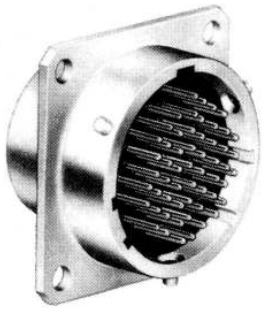

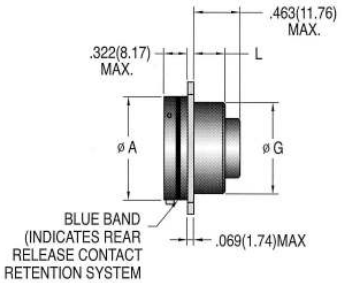

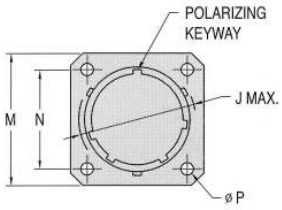

MS 27513

Inch(mm)

Shell Size	A Dia. Max.	G Dia. Max.	J Dia. Max.	L Dia. Max.	M Max.	N Max.	P +.005 (0.13) -.010 (0.25)
8	.474(12.04)	.421(10.69)	.563(14.30)	.312(7.92)	.828(21.03)	.594(15.09)	.125(3.18)
10	.591(15.01)	.542(13.77)	.680(17.27)	.312(7.92)	.954(24.23)	.719(18.26)	.125(3.18)
12	.751(19.08)	.667(16.94)	.859(21.82)	.312(7.92)	1.047(26.59)	.812(20.62)	.125(3.18)
14	.876(22.25)	.791(20.09)	.984(24.99)	.312(7.92)	1.141(28.98)	.906(23.01)	.125(3.18)
16	1.001(25.43)	.916(23.27)	1.108(28.14)	.312(7.92)	1.234(31.34)	.969(24.61)	.125(3.18)
18	1.126(28.60)	1.034(26.26)	1.233(31.32)	.312(7.92)	1.328(33.73)	1.062(26.97)	.125(3.18)
20	1.251(31.78)	1.158(29.41)	1.358(34.49)	.312(7.92)	1.453(36.91)	1.156(27.36)	.125(3.18)
22	1.376(34.95)	1.283(32.59)	1.483(37.67)	.312(7.92)	1.578(39.08)	1.250(31.76)	.125(3.18)
24	1.501(38.13)	1.408(35.76)	1.610(40.89)	.312(7.92)	1.703(43.26)	1.375(34.92)	.152(3.86)

● Jam Nut Mounting-MS27477

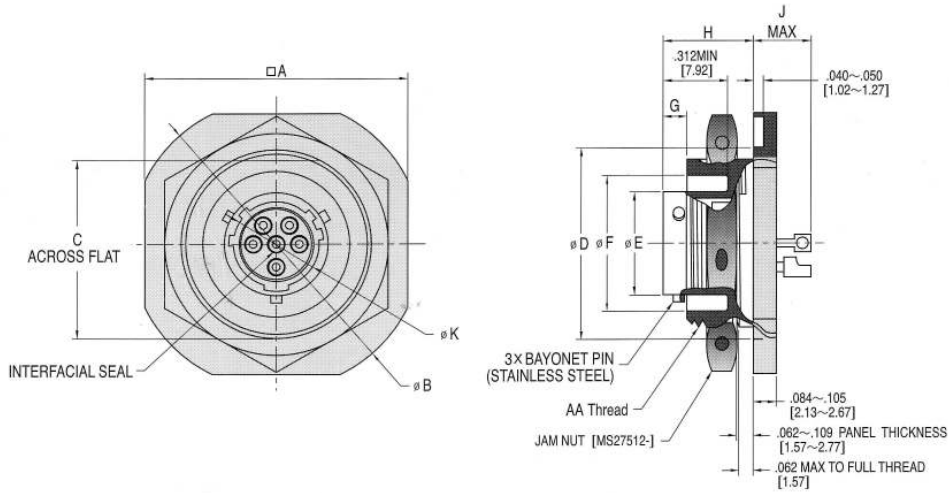

EXPLANATION OF MS PART NUMBER

MS 27477 Y 8 D 35 P A

MILITARY PREFIX

SHELL STYLE
JAM NUT MOUNT SERIES Ⅱ
BAYONET COUPLING

CLASS
Y = HERMETIC
H = HERMETIC,
SPACE GRADE

SHELL SIZE
(SEE TABLE)

ALTERNATE INSERT POSITION
(BLANK) = NORMAL
W. X. Y. Z

CONTACT STYLE
P = PIN WITH SOLDER CUP
S = SOCKET WITH SOLDER CUP
X = PIN WITH EYELET
Z = SOCKET WITH EYELET
(CONTACTS ARE GOLD PLATED)

INSERT ARRANGEMENT

FINISH
SHELL
D = FUSED TIN CARBON STEEL (CONDUCTIVE)
E = STAINLESS STEEL, PASSIVATED (CONDUCTIVE)
N = STAINLESS STEEL
ELECTROLESS NICKEL DEPOSITED (CONDUCTIVE)

Inch(mm)

Shell Size	AA Thread Class 2A	RECONNENDED PACKING O-RING	□A		øB		C		øD		øE		G		øF		H		J		øK	
8	.875-20 UNEF	MS9021-022	1.266 1.234	(32.15) (31.34)	1.391 1.359	(35.33) (34.52)	.818 .811	(20.77) (20.60)	.971 .960	(24.66) (24.38)	.474 .468	(12.04) (11.88)	.474	(17.22)	.474 .468	(3.68) (3.56)	.443 .433	(11.25) (11.00)	.281	(7.14)	.367 .361	(9.32) (9.16)
10	1.000-20 UNEF	MS9021-024	1.391 1.359	(35.33) (34.52)	1.516 1.484	(38.50) (37.69)	.942 .935	(23.93) (23.75)	1.096 1.085	(27.84) (27.56)	.591 .585	(15.01) (14.86)	.780	(19.81)							.495 .489	(12.57) (12.42)
12	1.125-18 UNEF	MS9021-026	1.516 1.484	(38.51) (37.69)	1.641 1.609	(41.68) (40.87)	1.066 1.059	(27.07) (26.90)	1.221 1.210	(31.01) (30.73)	.751 .745	(19.07) (18.92)	.963	(24.46)							.612 .606	(15.54) (15.39)
14	1.250-18 UNEF	MS9021-028	1.641 1.609	(41.68) (41.87)	1.766 1.734	(44.85) (44.04)	1.191 1.184	(30.25) (30.07)	1.346 1.335	(34.19) (33.91)	.876 .870	(22.25) (22.09)	1.088	(27.63)							.737 .731	(18.72) (18.56)
16	1.375-18 UNEF	MS9021-029	1.797 1.765	(45.64) (44.83)	1.954 1.922	(49.63) (48.82)	1.321 1.314	(33.55) (33.37)	1.483 1.472	(37.67) (37.39)	1.001 .995	(25.43) (25.27)	1.222	(31.04)							.862 .856	(21.89) (21.14)
18	1.500-18 UNEF	MS9021-030	1.906 1.874	(48.41) (48.60)	2.032 2.000	(51.61) (50.80)	1.441 1.434	(36.60) (36.42)	1.608 1.597	(40.84) (40.56)	1.126 1.120	(28.60) (25.45)	1.333	(33.86)							.967 .961	(24.56) (24.41)
20	1.625-18 UNEF	MS9021-031	2.032 2.000	(51.61) (50.80)	2.157 2.125	(54.78) (53.98)	1.566 1.559	(39.77) (39.60)	1.733 1.722	(44.02) (43.74)	1.251 1.245	(31.77) (31.62)	1.458	(37.03)							1.092 1.086	(27.74) (27.58)
22	1.750-18 UNS	MS9021-032	2.156 2.124	(54.76) (53.95)	2.281 2.249	(57.94) (57.12)	1.691 1.684	(42.95) (42.77)	1.858 1.847	(47.19) (46.91)	1.376 1.370	(34.95) (34.79)	1.583	(40.21)	.171 .166	(4.34) (4.22)	.469 .459	(11.91) (11.66)	.250	(6.35)	1.217 1.211	(30.91) (30.76)
24	1.875-16 UNEF	MS9021-033	2.281 2.249	(57.94) (57.12)	2.406 2.374	(61.11) (60.30)	1.816 1.809	(46.13) (45.95)	1.983 1.972	(50.37) (50.08)	1.500 1.495	(38.12) (37.97)	1.708	(43.38)							1.342 1.336	(34.09) (33.93)

● Bayonet Coupling

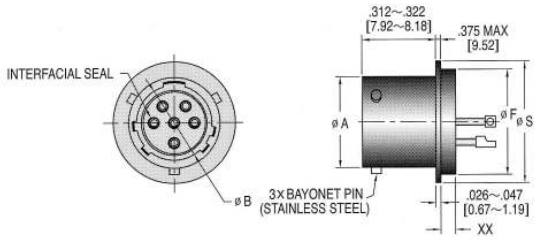

MS27478 SOLDER MOUNT

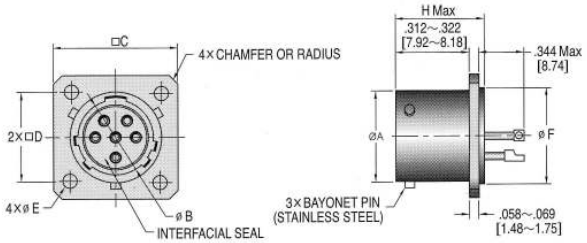

MS27476 BOX MOUNT

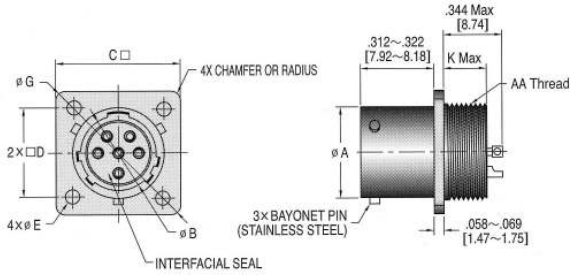

MS 27475 WALL MOUNT

EXPLANATION OF MS PART NUMBER

MS 27477 Y 8 D 35 P A

MILITARY PREFIX

SHELL STYLE
JAM NUT MOUNT SERIES Ⅱ
BAYONET COUPLING

CLASS
Y = HERMETIC
H = HERMETIC,
SPACE GRADE

SHELL SIZE
(SEE TABLE)

ALTERNATE INSERT POSITION
(BLANK) = NORMAL
W. X. Y. Z

CONTACT STYLE
P = PIN WITH SOLDER CUP
S = SOCKET WITH SOLDER CUP
X = PIN WITH EYELET
Z = SOCKET WITH EYELET
(CONTACTS ARE GOLD PLATED)

INSERT ARRANGEMENT

FINISH
SHELL
D = FUSED TIN CARBON STEEL (CONDUCTIVE)
E = STAINLESS STEEL, PASSIVATED (CONDUCTIVE)
N = STAINLESS STEEL
ELECTROLESS NICKEL DEPOSITED (CONDUCTIVE)

Inch(mm)

Shell Size	AA Thread CLASS 2A	ø A		ø B		□C Max		2x□D BSC		ø E		ø F		K Max		ø G Max		H Max		ø S		XX	
8	.875-20 UNEF	.474 .468	(12.04) (11.88)	.367 .361	(9.32) (9.16)	.828	(21.03)	.594	(15.09)	.130 .115	(3.30) (2.92)	.563 .557	(14.30) (14.14)	.250	(6.35)	1.078	(27.38)	.453	(11.50)	.698 .677	(17.73) (17.19)	.125	(3.17)
10	.6875-24UNEF	.591 .585	(15.01) (14.86)	.495 .489	(12.57) (12.42)	.954	(24.23)	.719	(18.26)			.673 .667	(17.09) (16.94)			1.256	(31.90)			.808 .787	(20.52) (19.99)		
12	.8125-20UNEF	.751 .745	(19.07) (18.92)	.612 .606	(15.54) (15.39)	1.047	(26.59)	.812	(20.62)			.782 .776	(19.86) (19.71)			1.391	(35.33)			.917 .896	(23.29) (22.76)		
14	.9375-20UNEF	.876 .870	(22.25) (22.09)	.737 .731	(18.72) (18.56)	1.141	(28.98)	.906	(23.01)			.907 .901	(23.03) (22.88)			1.516	(38.51)			1.042 1.021	(26.46) (25.93)		
16	1.0625-18UNEF	1.001 .995	(25.43) (25.27)	.862 .856	(21.89) (21.74)	1.234	(31.34)	.969	(24.61)			1.032 1.026	(26.21) (26.06)			1.541	(41.68)			1.167 1.146	(29.64) (29.11)		
18	1.1875-18UNEF	1.126 1.120	(28.60) (28.45)	.967 .961	(24.56) (24.41)	1.328	(33.73)	1.062	(26.97)			1.157 1.151	(29.38) (29.23)			1.766	(44.85)			1.292 1.271	(32.82) (32.28)		
20	1.3125-18UNEF	1.251 1.245	(31.77) (31.62)	1.092 1.086	(27.74) (27.58)	1.453	(36.91)	1.156	(29.36)			1.251 1.245	(31.77) (31.62)			1.891	(48.03)			1.386 1.365	(35.20) (34.67)		
22	1.4375-18UNEF	1.376 1.370	(34.95) (34.79)	1.217 1.211	(30.91) (30.76)	1.578	(40.08)	1.250	(31.75)			1.376 1.370	(34.95) (34.80)			2.016	(51.21)			1.511 1.490	(38.38) (37.84)	.156	(3.96)
24	1.5625-18UNEF	1.501 1.495	(38.12) (37.97)	1.342 1.336	(34.09) (33.93)	1.703	(43.26)	1.375	(34.93)	.157 .142	(3.98) (3.61)	1.501 1.492	(38.12) (37.97)	.375	(9.52)	2.204	(55.98)	.484	(12.29)	1.636 1.615	(41.55) (41.02)		

Miniature MS

CONNECTORS

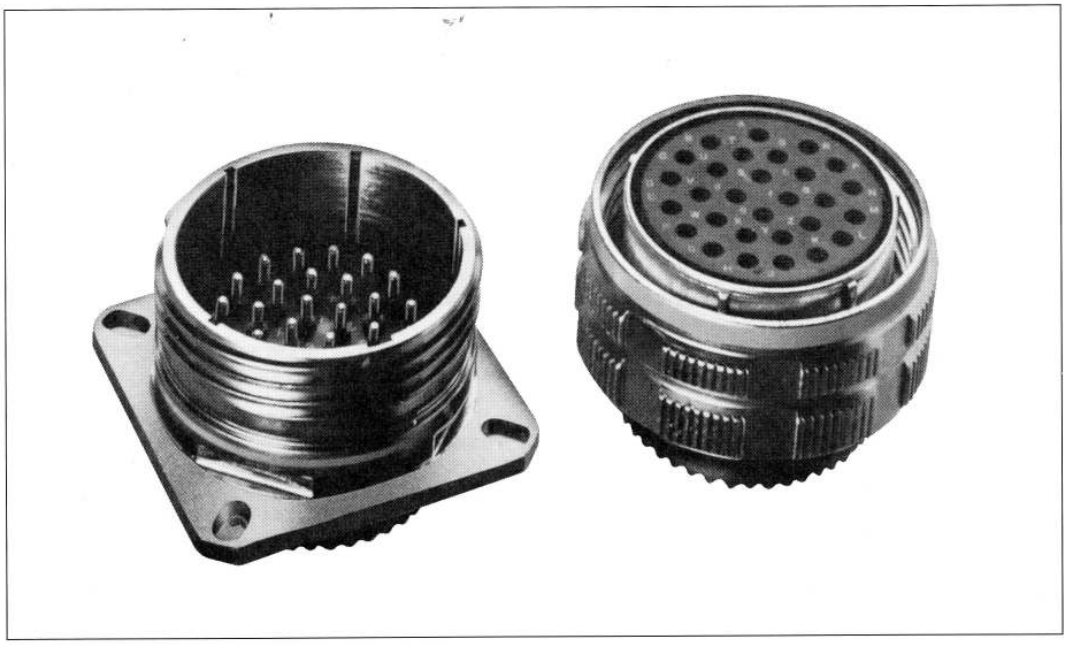

CONTENTS

Ordering Information And Specifications	22
D 38999/20(Wall Mounting Receptacle)	23
D 38999/24(Jam Nut Mount, Receptacle)	23
D 38999/26(EMI Grounding , Plug)	24
Panel Cutouts	24
MIL-C-38999 Series III Hermetic Connectors	25

● Ordering Information And Specifications

MS38999 20 F C 35 P B

- Connector Type
- Shell Style
- Service Class (Hardware Finish)
- Shell Size
- Contact Arrangement
- Contact Style
- Shell keying Position

- **Shell Style**
  D38999/20- - Wall Mount Receptacle
  MS38999/24 - Jam Nut Receptacle
  MS38999/26 -Straight plug, Grounded
- **Connector Type**
  MS38999-MIL-C38999 Series Ⅲ
- **Shell Style**
  D38999/20- - Wall Mount Receptacle
  MS38999/24 - Jam Nut Receptacle
  MS38999/26 -Straight plug, Grounded
- **Service Class**
  (HardwareFinish)
  F - Electroless nickel -85℉ to + 392℉(-65℃ to +200℃)
  W - Olive drab cadmium over electroless nickel plate-85℉ to + 347℉(-65℃ to +175℃)
- **Shell Size**

A	B	C	D	E	F	G	H	J
9	11	13	15	17	19	21	23	25

- **Contacts Arrangement**
  MIL-C-38999 Series Ⅱ
- **Contacts Style**
  P - Pin *A - Less Pin Contact
  S - Socket *B - Less Socket Contact
  *Used only when other than power contacts are to be installed
  (i. e. shielded. thermocouple. etc.)

- **Shell Keying Position**
  N (normal) A, B, C, D. E
  Note : To order MS connectors less standard power contacts, purchase order must state "Less Contacts."
- **Operating Temperature Range**
  -65° to + 200℃ (85℉ to + 392℉)
- **Durability**
  Minimum of 500 mating cycles.
- **Shock and Vibration Requirements**
  When tested as follows the connector shall sustain no physical damage or electrical discontinuity exceeding one microsecond.
- **Standard Shock :**
  Pulse of an approximate half sine wave of 300g magnitude with duration of 3miliseconds applied in three axes.
- **Random Vibration**
  (without simulated accessory load) : 41.7 G RMS for 8 hours in two axes, totaling 16 hours at ambient temperature.
- **High Impact Shock : 38999 Ⅰ, Ⅱ**
  When mounted as specified in MIL-S-901, Grade A, a drop of a 400 lb, Hammer from 1 foot, 3 feet and 5 feet applied to connector in three axes, totaling nine impacts.
- **Vibration :**
  · **Sine**
  Frequency range of 10 to 2000 Hz, in 20 minute sweeps, in 3 axes with the following variations :
  - Duration : 12hours total, 4 hour cycles.
  - Level : Displacement of 0.6 inch [1.5mm](10~100Hz) and acceleration of 30 G's peak(100~2000Hz) at ambient room temperature.

  · **Random**
  - (without simulated accessory load) : 49.5G RMS for 8 hours in two axes, totaling 16 hours at ambient tempeature.
- **R. F. I & E. M. I**
  R. F. I & E. M. I attenuation at the specified frequency meet the requirements of MIL-C-38999.
  R. F. I shielding effectiveness of mated connectors with R. F. I backshells is measured in a triaxial radio frequency leakage fixture.
  E. M. I shielding effectiveness is measured at the interface of mated connectors and tested by the MODE STIR procedure specified in method 3008 of MIL-STD-1344

● D38999/20 Wall Mount Receptacle

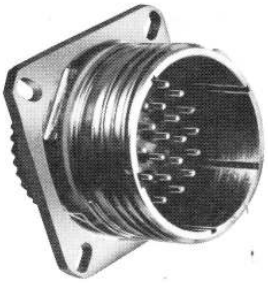

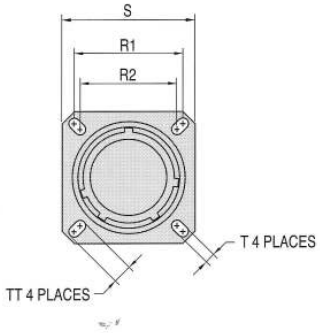

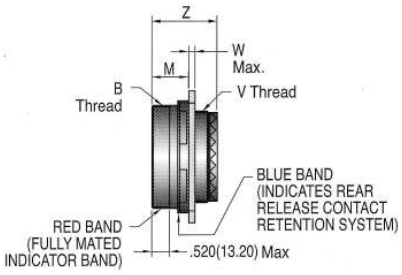

D38999/20

Inch(mm)

Shell Size	B Thread Class 2A (Plated)	B Thread Class 2A (Plated)	M +.000(.000) -.005(.130)	R_1	R_2	S ±.012(.300)	T +.004(.100) -.002(.050)	TT +.004(.100) -.002(.050)	V Thread (Plated)	W Max.	Z +.005(.130) -.010(.250)
9	A	.6250-0.1P-0.3L-TS	.820(20.83)	.719(18.26)	.594(15.09)	.938(23.83)	.128(3.25)	.216(5.49)	M12x1-6g0.100R	.098(2.50)	1.235(31.36)
11	B	.7500-0.1P-0.3L-TS	.820(20.83)	.812(20.62)	.719(18.26)	1.031(26.19)	.128(3.25)	.194(4.93)	M15x1-6g0.100R	.098(2.50)	1.235(31.36)
13	C	.8750-0.1P-0.3L-TS	.820(20.83)	.906(23.01)	.812(20.62)	1.125(28.58)	.128(3.25)	.193(4.93)	M18x1-6g0.100R	.098(2.50)	1.235(31.36)
15	D	1.0000-0.1P-0.3L-TS	.820(20.83)	.969(24.61)	.906(23.01)	1.219(30.96)	.128(3.25)	.173(4.39)	M22x1-6g0.100R	.098(2.50)	1.235(31.36)
17	E	1.1875-0.1P-0.3L-TS	.820(20.83)	1.062(26.97)	.969(24.61)	1.312(33.32)	.128(3.25)	.194(4.93)	M25x1-6g0.100R	.098(2.50)	1.235(31.36)
19	F	1.2500-0.1P-0.3L-TS	.820(20.83)	1.156(29.36)	1.062(26.97)	1.438(36.53)	.128(3.25)	.194(4.93)	M28x1-6g0.100R	.098(2.50)	1.235(31.36)
21	G	1.3750-0.1P-0.3L-TS	.790(20.07)	1.250(31.75)	1.156(29.36)	1.562(39.67)	.128(3.25)	.194(4.93)	M31x1-6g0.100R	.126(3.20)	1.235(31.36)
23	H	1.5000-0.1P-0.3L-TS	.790(20.07)	1.375(34.92)	1.250(31.75)	1.688(42.88)	.154(3.91)	.242(6.15)	M34x1-6g0.100R	.126(3.20)	1.235(31.36)
25	J	1.6250-0.1P-0.3L-TS	.790(20.07)	1.500(38.10)	1.375(34.92)	1.812(46.02)	.154(3.91)	.242(6.15)	M37x1-6g0.100R	.126(3.20)	1.235(31.36)

● D38999/24 Jam Nut Receptacle

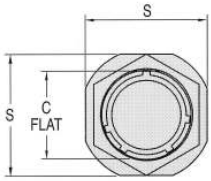

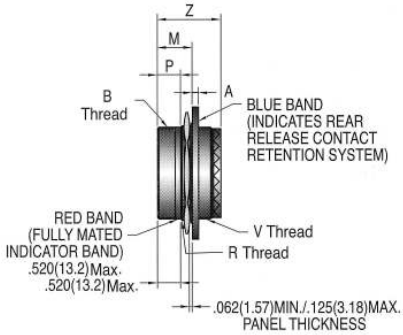

D38999/24

Inch(mm)

Shell Size	MS Shell Size Code	A +.010(.250) -.005(.050)	B Thread Class 2A (Plated)	C +.004(.100) -.010(.250)	Z +.005(.130) -.004(.100)	M +.005(.130) -.004(.100)	P +.016(.410) -.004(.100)	S	R Thread (Plated)	V Thread (Plated)
9	A	.104(2.64)	.6250-0.1P-0.3L-TS	.651(16.53)	1.243(31.57)	.871(22.12)	.555(14.10)	1.062(26.97)	M17x1-6g0.100R	M12x1-6g0.100R
11	B	.104(2.64)	.7500-0.1P-0.3L-TS	.751(19.07)	1.243(31.57)	.871(22.12)	.555(14.10)	1.250(31.75)	M20x1-6g0.100R	M15x1-6g0.100R
13	C	.104(2.64)	.8750-0.1P-0.3L-TS	.938(23.82)	1.243(31.57)	.878(22.30)	.563(14.30)	1.375(34.92)	M25x1-6g0.100R	M18x1-6g0.100R
15	D	.104(2.64)	1.0000-0.1P-0.3L-TS	1.062(26.97)	1.243(31.57)	.878(22.30)	.563(14.30)	1.500(38.10)	M28x1-6g0.100R	M22x1-6g0.100R
17	E	.104(2.64)	1.1875-0.1P-0.3L-TS	1.187(30.15)	1.243(31.57)	.878(22.30)	.563(14.30)	1.625(41.28)	M32x1-6g0.100R	M25x1-6g0.100R
19	F	.135(3.43)	1.2500-0.1P-0.3L-TS	1.312(33.32)	1.243(31.57)	.878(22.30)	.563(14.30)	1.812(46.02)	M35x1-6g0.100R	M28x1-6g0.100R
21	G	.135(3.43)	1.3750-0.1P-0.3L-TS	1.437(36.50)	1.243(31.57)	.878(22.30)	.563(14.30)	1.938(49.23)	M38x1-6g0.100R	M31x1-6g0.100R
23	H	.135(3.43)	1.5000-0.1P-0.3L-TS	1.562(39.67)	1.243(31.57)	.878(22.30)	.563(14.30)	2.062(52.37)	M41x1-6g0.100R	M34x1-6g0.100R
25	J	.135(3.43)	1.6250-0.1P-0.3L-TS	1.687(42.85)	1.243(31.57)	.878(22.30)	.563(14.30)	2.188(55.38)	M44x1-6g0.100R	M37x1-6g0.100R

● D38999/26 EMI Grounding Plug

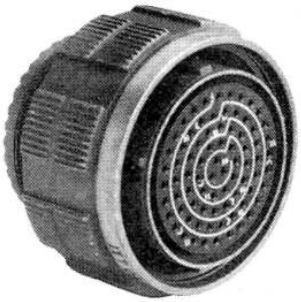

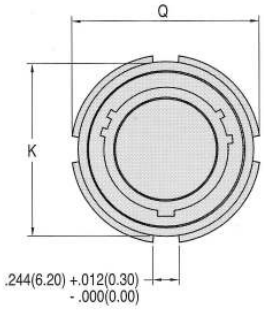

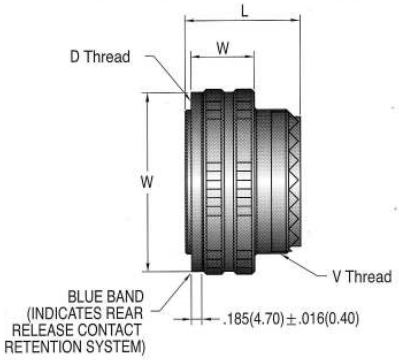

D38999/26

Inch(mm)

Shell Size	MS Shell Size Code	B +.008 (.200) -.000 (.000)	D Thread Class 2B (Plated)	K Max.	L Max.	Q Dia. Max.	V Thread (Plated)	W +.008 (.200) -.004 (.100)
9	A	.724(18.40)	.6250-0.1P-0.3L-TS	.748(19.00)	1.234(31.34)	.859(21.82)	M12x1-6g0.100R	.760(19.30)
11	B	.831(21.10)	.7500-0.1P-0.3L-TS	.862(21.90)	1.234(31.34)	.969(24.61)	M15x1-6g0.100R	.760(19.30)
13	C	1.000(25.40)	.8750-0.1P-0.3L-TS	1.027(26.10)	1.234(31.34)	1.141(28.98)	M18x1-6g0.100R	.760(19.30)
15	D	1.130(28.70)	1.0000-0.1P-0.3L-TS	1.153(29.30)	1.234(31.34)	1.266(32.16)	M22x1-6g0.100R	.760(19.30)
17	E	1.268(32.20)	1.1875-0.1P-0.3L-TS	1.291(32.80)	1.234(31.34)	1.391(35.53)	M25x1-6g0.100R	.760(19.30)
19	F	1.374(34.90)	1.2500-0.1P-0.3L-TS	1.398(35.50)	1.234(31.34)	1.500(38.10)	M28x1-6g0.100R	.760(19.30)
21	G	1.500(38.10)	1.3750-0.1P-0.3L-TS	1.542(38.70)	1.234(31.34)	1.625(41.28)	M31x1-6g0.100R	.760(19.30)
23	H	1.618(41.40)	1.5000-0.1P-0.3L-TS	1.642(41.70)	1.234(31.34)	1.750(44.45)	M34x1-6g0.100R	.760(19.30)
25	J	1.744(44.30)	1.6250-0.1P-0.3L-TS	1.768(44.90)	1.234(31.34)	1.875(47.62)	M37x1-6g0.100R	.760(19.30)

● Panel Cutouts

• Wall Mounted Receptacle

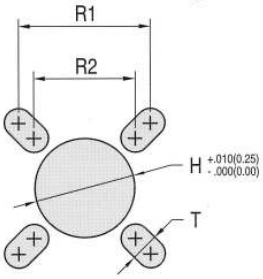

• Jam Nut Receptacle

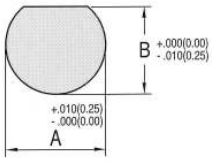

Inch(mm)

Shell Size	A	B	H	R1 (TP)	R2 (TP)	T (Max.)
9	.700(17.78)	.670(17.02)	.626(15.90)	.719(18.26)	.594(15.09)	.134(3.40)
11	.825(20.26)	.770(19.59)	.751(19.08)	.812(20.62)	.719(18.26)	.134(3.40)
13	1.010(25.65)	.955(24.26)	.876(22.25)	.906(23.01)	.812(20.62)	.134(3.40)
15	1.135(28.83)	1.085(27.56)	1.001(25.43)	.969(24.61)	.906(23.01)	.134(3.40)
17	1.260(32.01)	1.210(30.73)	1.188(30.18)	1.062(26.97)	.969(24.61)	.134(3.40)
19	1.385(35.18)	1.335(33.91)	1.251(31.78)	1.156(29.36)	1.062(26.97)	.134(3.40)
21	1.510(38.35)	1.460(37.08)	1.376(34.95)	1.250(31.75)	1.156(29.36)	.134(3.40)
23	1.635(41.53)	1.585(40.26)	1.511(38.38)	1.375(34.92)	1.250(31.75)	.160(4.06)
25	1.760(44.70)	1.710(43.43)	1.626(41.30)	1.500(38.10)	1.357(34.92)	.160(4.06)

● Hermetic Wall Mounting-D38999/21

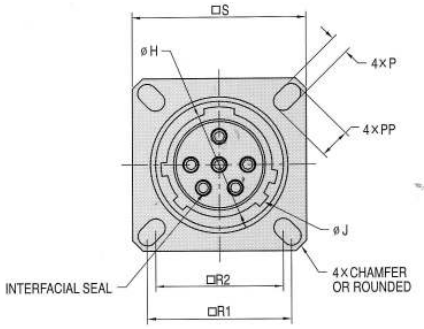

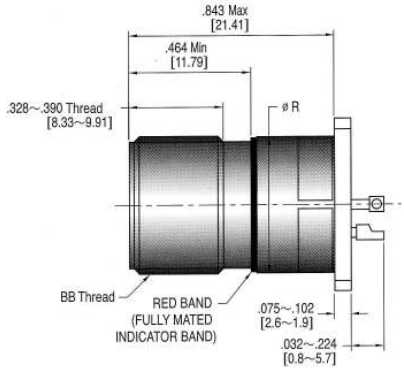

EXPLANATION OF MS PART NUMBER

D38999 / 27 Y A 35 P N

MILITARY PREFIX

SHELL STYLE
BOX MOUNTING (D38999/21)
SERIES Ⅲ
TRIPLE START THREADED COUPLING

CLASS
Y = HERMETIC. STAINLESS STEEL. PASSIVATED
H = HERMETIC. STAINLESS STEEL. SPACE GRADE
N = HERMETIC. STAINLESS STEEL. ELECTRO NICKEL DEPOSITED

SHELL SIZE
(SEE TABLE)

ALTERNATE INSERT POSITION
N = NORMAL
A. B. C. D. E

CONTACT STYLE
P = PIN WITH SOLDER CUP
S = SOCKET WITH SOLDER CUP
X = PIN WITH EYELET
Z = SOCKET WITH EYELET
(SIZE 16 AND 20 FOR EYELET CONTACTS ONLY)
(CONTACTS ARE GOLD PLATED)

INSERT ARRANGEMENT

Inch(mm)

Shell Size	Shell Size Code	BB Max 0.IP-0.3L-TS-2A		ø H		ø J		ø P		ø PP		ø R Max		R1 BSC		R2 BSC		□S	
9	A	.6250	(15.875)	.447 .441	(11.36) (11.20)	.497 .486	(12.63) (12.34)			.224 .208	(5.69) (5.28)	.625	(15.88)	.719	(18.26)	.594	(15.09)	.949 .925	(24.11) (23.50)
11	B	.7500	(19.050)	.575 .569	(14.61) (14.45)	.625 .614	(15.88) (15.60)			.202 .186	(5.13) (4.72)	.750	(19.05)	.812	(20.62)	.719	(18.26)	1.043 1.019	(26.49) (25.88)
13	C	.8750	(22.225)	.687 .681	(17.45) (17.30)	.774 .763	(19.66) (19.38)			.202 .186	(5.13) (4.72)	.875	(22.23)	.906	(23.01)	.812	(20.62)	1.138 1.114	(28.90) (28.30)
15	D	1.0000	(25.400)	.812 .804	(20.63) (20.44)	.899 .888	(22.84) (22.56)	.136 .120	(3.45) (3.05)	.181 .165	(4.60) (4.19)	1.000	(25.40)	.969	(24.61)	.906	(23.01)	1.232 1.208	(31.29) (30.68)
17	E	1.1875	(30.162)	.937 .930	(23.80) (23.64)	1.024 1.013	(26.01) (25.73)			.202 .186	(5.13) (4.72)	1.187	(30.16)	1.062	(26.97)	.9691.0	(24.61)	1.323 1.299	(33.60) (32.99)
19	F	1.2500	(31.750)	1.042 1.036	(26.47) (26.31)	1.127 1.118	(28.63) (28.40)			.202 .186	(5.13) (4.72)	1.250	(31.75)	1.156	(29.36)	62	(26.97)	1.449 1.425	(36.80) (36.20)
21	G	1.3750	(34.925)	1.167 1.161	(29.64) (29.49)	1.254 1.243	(31.85) (31.57)			.202 .186	(5.13) (4.72)	1.367	(34.73)	1.250	(31.75)	1.156	(29.36)	1.575 1.551	(40.00) (39.40)
23	H	1.5000	(38.100)	1.292 1.286	(32.82) (32.66)	1.379 1.368	(35.03) (34.75)	.162 .146	(4.11) (3.71)	.250 .234	(6.35) (5.35)	1.500	(38.10)	1.375	(34.93)	1.250	(31.75)	1.701 1.677	(43.20) (42.60)
25	J	1.6250	(41.275)	1.417 1.411	(35.99) (35.84)	1.504 1.493	(38.03) (37.92)			.250 .234	(6.35) (5.94)	1.625	(41.28)	1.500	(38.10)	1.375	(34.93)	1.823 1.799	(46.30) (45.69)

● Hermetic Jam Nut Mounting-D38999/23

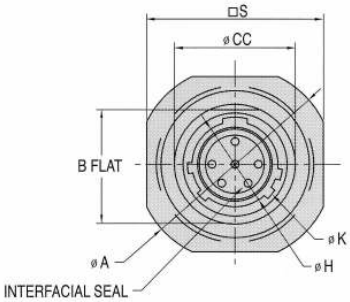

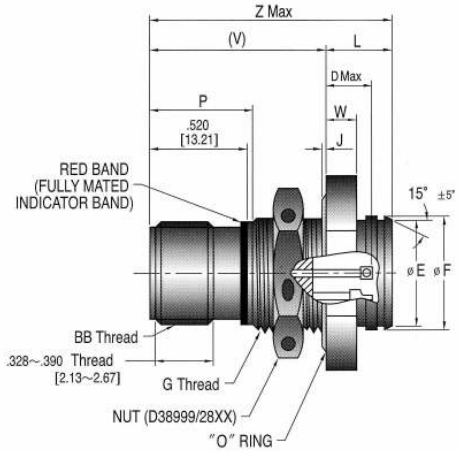

EXPLANATION OF MS PART NUMBER

D38999 / 27 Y A 35 P N

MILITARY PREFIX

SHELL STYLE
JAM-NUT MOUNTING. SERIES Ⅲ
TRIPLE START THREADED COUPLING

CLASS
Y = HERMETIC. STAINLESS STEEL. PASSIVATED
H = HERMETIC. STAINLESS STEEL. SPACE GRADE
N = HERMETIC. STAINLESS STEEL. ELECTRO NICKEL DEPOSITED

SHELL SIZE
(SEE TABLE)

ALTERNATE INSERT POSITION
N = NORMAL
A. B. C. D. E

CONTACT STYLE
P = PIN WITH SOLDER CUP
S = SOCKET WITH SOLDER CUP
X = PIN WITH EYELET
Z = SOCKET WITH EYELET
(SIZE 16 AND 20 FOR EYELET CONTACTS ONLY)
(CONTACTS ARE GOLD PLATED)

INSERT ARRANGEMENT

Inch(mm)

Shell Size	SHELL SIZE CODE	BB THREAD D.IP-0. 3L-TS-2A		ø A		B PLAT		ø CC HOLE MNT DIA		D Max. WITH PIN		D Max. WITH SOCKET		ø E		ø F		G Thread	ø H		J Max		ø K		L Max.		P		□S		V REF.		W		Z Max.	
9	A	.6250	(15.875)	1.200 1.177	(30.50) (29.90)	.688 .645	(16.63) (16.38)	.689 .677	(17.50) (17.20)	.209	(5.30)	.232	(5.90)	.614 .590	(15.60) (15.00)	.653 .642	(16.60) (16.30)	M1770-6gO.100R	.447 .441	(11.36) (11.20)	.358	(9.1)	.497 .485	(12.63) (12.34)	.358	(9.1)	.571 .551	(14.51) (14.00)	1.079 1.047	(27.40) (26.60)	.870	(22.1)	.114 .098	(2.90) (2.50)	1.150	(29.20)
11	B	.7500	(19.050)	1.386 1.362	(33.20) (34.50)	.755 .745	(19.17) (18.92)	.815 .803	(20.70) (20.40)					.736 .713	(18.70) (18.10)	.778 .764	(19.70) (19.40)	M2010-6gO.100R	.575 .569	(14.61) (14.45)			.625 .614	(15.88) (15.60)					1.268 1.236	(32.20) (31.40)						
13	C	.8750	(22.225)	1.512 1.488	(38.40) (37.40)	.942 .932	(23.92) (23.92)	1.004 .992	(25.50) (25.20)	.200	(5.10)	.224	(5.70)	.892 .838	(21.90) (21.30)	.906 .894	(23.00) (22.70)	M2510-6gO.100R	.687 .681	(17.45) (17.30)			.774 .763	(19.66) (19.36)					1.390 1.355	(35.40) (34.50)					1.153	(29.30)
15	D	1.0000	(25.400)	1.638 1.614	(41.60) (41.00)	1.066 1.055	(27.07) (26.82)	1.126 1.114	(28.60) (28.30)					.988 .964	(25.10) (24.50)	1.031 1.019	(26.20) (25.90)	M2810-6gO.100R	.812 .804	(20.63) (20.44)			.899 .888	(22.84) (22.56)					1.516 1.484	(38.50) (37.70)						
17	E	1.1875	(30.162)	1.764 1.740	(44.80) (44.20)	1.191 1.181	(30.25) (30.00)	---	---					1.114 1.090	(28.30) (27.70)	1.153 1.130	(29.30) (28.70)	M3210-6gO.100R	.937 .930	(23.80) (23.64)			1.024 1.012	(26.01) (25.73)					1.642 1.610	(40.70) (40.90)			.146 .130	(3.70) (3.30)		
19	F	1.2500	(31.750)	1.945 1.925	(49.50) (48.90)	1.316 1.306	(33.42) (33.17)	---	---	.200	(5.10)	.224	(5.70)	1.240 1.216	(31.50) (30.90)	1.279 1.260	(32.50) (32.20)	M3510-6gO.100R	1.042 1.036	(26.47) (26.31)			1.127 1.118	(28.63) (28.40)	.382	(9.7)	.579 .559	(14.7) (14.2)	1.826 1.795	(46.40) (46.40)	.878	(22.30)			1.085	(30.10)
21	G	1.3750	(34.925)	2.075 2.051	(52.70) (52.10)	1.441 1.431	(36.60) (36.35)	---	---					1.362 1.338	(34.60) (34.00)	1.406 1.394	(35.70) (35.40)	M3810-6gO.100R	1.167 1.161	(29.64) (29.48)			1.253 1.243	(31.85) (31.57)					1.953 1.921	(49.60) (8.801						
23	H	1.5000	(38.100)	2.200 2.177	(55.90) (55.30)	1.566 1.556	(39.77) (39.52)	1.626 1.614	(14.30) (41.00)					1.488 1.464	(37.80) (37.20)	1.531 1.519	(38.90) (38.60)	M4100-6gO.100R	1.292 1.266	(32.82) (32.66)	.059	(1.5)	1.378 1.368	(35.00) (36.20)					2.079 2.047	(52.80) (52.01)						
25	J	1.6250	(41.275)	2.322 2.299	(59.00) (58.40)	1.691 1.681	(42.95) (42.70)	1.762 1.740	(44.50) (44.20)					1.614 1.590	(41.00) (40.40)	1.653 1.642	(42.00) (41.70)	M4400-6gO.100R	1.417 1.411	(35.99) (35.84)	.059	(1.5)	1.504 1.492	(36.20) (31.92)					2.265 2.173	(56.01) (55.20)						

● Hermetic Solder Mounting-D38999/25

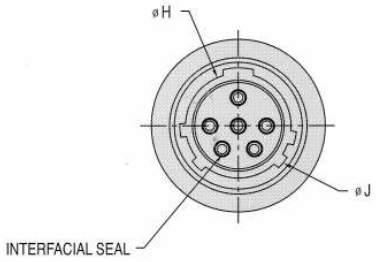

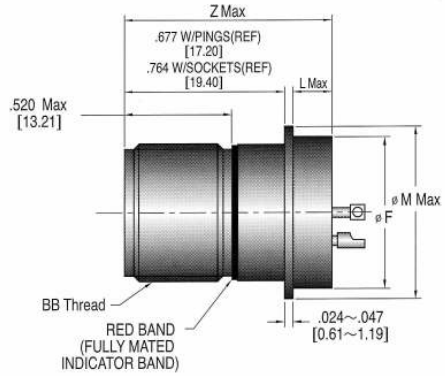

EXPLANATION OF MS PART NUMBER

D38999 / 27 Y A 35 P N

MILITARY PREFIX

SHELL STYLE
SOLDER MOUNT (38999/25)
SERIES Ⅲ
TRIPLE START THREADED COUPLING

CLASS
Y = HERMETIC. STAINLESS STEEL. PASSIVATED
H = HERMETIC. STAINLESS STEEL. SPACE GRADE
N = HERMETIC. STAINLESS STEEL. ELECTRO NICKEL DEPOSITED

SHELL SIZE
(SEE TABLE)

ALTERNATE INSERT POSITION
N = NORMAL
A. B. C. D. E

CONTACT STYLE
P = PIN WITH SOLDER CUP
S = SOCKET WITH SOLDER CUP
X = PIN WITH EYELET
Z = SOCKET WITH EYELET
(SIZE 16 AND 20 FOR EYELET CONTACTS ONLY)
(CONTACTS ARE GOLD PLATED)

INSERT ARRANGEMENT

Inch(mm)

Shell Size	Shell Size Code	BB Max 0.IP-0.3L-TS-2A		ø H		ø J		ø F		L Max		ø M Max		Z Max	
9	A	.6250	(15.875)	.447 .441	(11.36) (11.20)	.497 .486	(12.63) (12.34)	.673	(17.10)	.200	(5.10)	.764	(19.40)	.937	(23.80)
11	B	.7500	(19.050)	.575 .569	(14.61) (14.45)	.625 .614	(15.88) (15.60)	.783	(19.90)			.858	(21.80)		
13	C	.8750	(22.225)	.687 .681	(17.45) (17.30)	.774 .763	(19.66) (19.38)	.909	(23.10)			.980	(24.90)		
15	D	1.0000	(25.400)	.812 .804	(20.63) (20.44)	.899 .888	(22.84) (22.56)	1.031	(26.20)			1.106	(28.10)		
17	E	1.1875	(30.162)	.937 .930	(23.80) (23.64)	1.024 1.013	(26.01) (25.73)	1.157	(29.40)			1.232	(31.30)		
19	F	1.2500	(31.750)	1.042 1.036	(26.47) (26.31)	1.127 1.118	(28.63) (28.40)	1.252	(31.80)			1.322	(33.60)		
21	G	1.3750	(34.925)	1.167 1.161	(29.64) (29.49)	1.254 1.243	(31.85) (31.57)	1.378	(35.00)			1.448	(36.80)		
23	H	1.5000	(34.925)	1.292 1.286	(32.82) (32.66)	1.379 1.368	(35.03) (34.75)	1.504	(38.20)	.232	(5.90)	1.575	(40.00)	.968	(24.60)
25	J	1.6250	(41.275)	1.417 1.411	(35.99) (35.84)	1.504 1.493	(38.20) (37.92)	1.625	(41.30)			1.700	(43.20)		

● Hermetic Weld Mounting-D38999/27

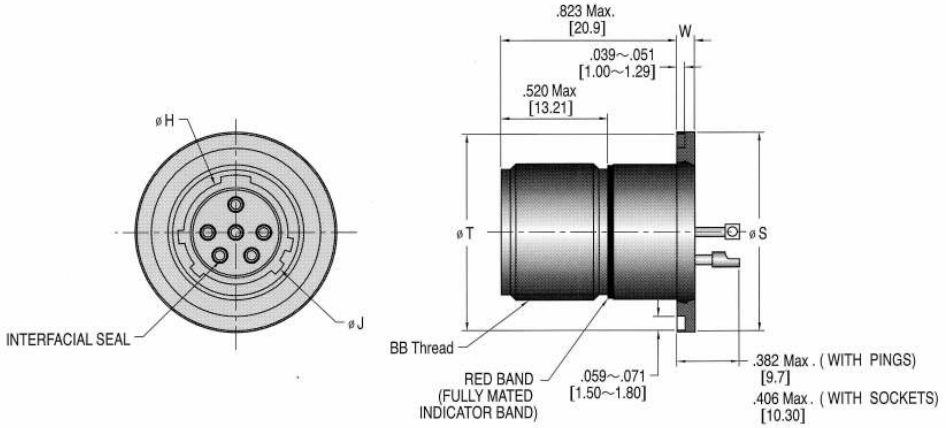

EXPLANATION OF MS PART NUMBER

D38999 / 27 Y A 35 P N

MILITARY PREFIX

SHELL STYLE
WELD MOUNT. SERIES Ⅲ
TRIPLE START THREADED COUPLING

CLASS
Y = HERMETIC. STAINLESS STEEL. PASSIVATED
H = HERMETIC. STAINLESS STEEL. SPACE GRADE
N = HERMETIC. STAINLESS STEEL. ELECTRO NICKEL DEPOSITED

SHELL SIZE
(SEE TABLE)

INSERT ARRANGEMENT

CONTACT STYLE
P = PIN WITH SOLDER CUP
S = SOCKET WITH SOLDER CUP
X = PIN WITH EYELET
Z = SOCKET WITH EYELET
(SIZE 16 AND 20 FOR EYELET CONTACTS ONLY)
(CONTACTS ARE GOLD PLATED)

ALTERNATE INSERT POSITION
(BLANK) = NORMAL
A. B. C. D. E

Inch(mm)

Shell Size	Shell Size Code	BB Thread 0.IP-0.3L-TS-2A		ø H		ø J		ø S		ø T		W	
9	A	.6250	(15.875)	.447 .441	(11.36) (11.20)	.497 .486	(12.63) (12.34)	.984 .972	(25.00) (24.70)	.941 .929	(23.90) (23.60)	.134 .118	(3.40) (3.00)
11	B	.7500	(19.050)	.575 .569	(14.61) (14.45)	.625 .614	(15.88) (15.60)	1.106 1.094	(28.0) 27.80)	1.03 1.051	(27.00) (26.70)		
13	C	.87050	(22.225)	.687 .681	(17.45) (17.30)	.774 .763	(19.66) (19.38)	1.232 1.220	(31.30) (31.00)	1.189 1.177	(30.20) (29.90)		
15	D	1.0000	(25.400)	.812 .804	(20.63) (20.44)	.899 .888	(22.84) (22.56)	1.358 1.346	(34.50) (34.20)	1.315 1.303	(33.40) (33.10)		
17	E	1.1875	(30.162)	.937 .930	(23.80) (23.64)	1.024 1.013	(26.01) (25.73)	1.444 1.433	(36.70) (36.40)	1.402 1.390	(35.60) (35.30)		
19	F	1.2500	(31.750)	1.042 1.036	(26.47) (26.31)	1.127 1.118	(28.63) (28.40)	1.591 1.579	(40.40) (40.10)	1.547 1.535	(39.30) (39.00)		
21	G	1.3750	(34.925)	1.167 1.161	(29.64) (29.49)	1.254 1.243	(31.85) (31.57)	1.732 1.720	(44.00) (43.70)	1.689 1.677	(42.90) (42.60)		
23	H	1.5000	(38.100)	1.292 1.286	(32.82) (32.66)	1.379 1.368	(35.03) (34.75)	1.898 1.886	(48.20) (47.90)	1.854 1.842	(47.10) (46.80)	.165 .150	(4.20) (3.80)
25	J	1.6250	(41.275)	1.417 1.403	(35.99) (35.66)	1.504 1.492	(38.20) (37.92)	1.984 1.972	950.40) (50.10)	1.941 1.929	(49.30) (49.00)		

● Contact Arrangements (Engaging View Pin Insert)

* Socket insert only
** Pin insert only (Not available in socket insert Series Ⅰ and Ⅱ)

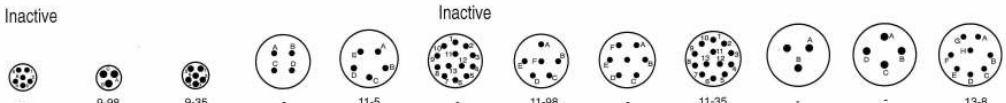

	Inactive					Inactive						
Series Ⅲ	-	9-98	9-35	-	11-5	-	11-98	-	11-35	-	-	13-8
Series Ⅱ	8-6	8 98	8-35	-	10-5	10-35	10-98	10-99	10-35	12-3	12-4	12-8
Series Ⅰ	9-6**	9-98	9-35	11-4	11-5	11-35	11-98	11-99**	11-35	-	13-4**	13-8
No. of Contacts	6 #22M	3 #20	6 #22D	4 #20	5 #20	13 #22M	6 #20	7 #20	13 #20D	3 #16	4 #16	8 #20
Service Ratings	M	I	M	I	I	M	I	I	M	II	I	I

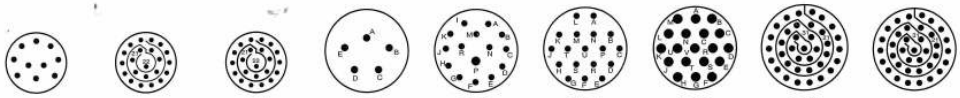

Series Ⅲ	13-98	-	13-35	15-15	15-15	15-18	15-19	15-35	-
Series Ⅱ	12-98	12-22	12-35	14-15	14-15	14-18	-	14-35	14-37
Series Ⅰ	13-98	13-22**	13-35	15-15	15-15	15-18	15-19	15-35	15-37**
No. of Contacts	10 #20	22 #22M	22 #22D	5 #16	14 #20, 1 #16	18 #20	19 #20	37 #22D	37 #22M
Service Ratings	I	M	M	II	I	I	I	M	M

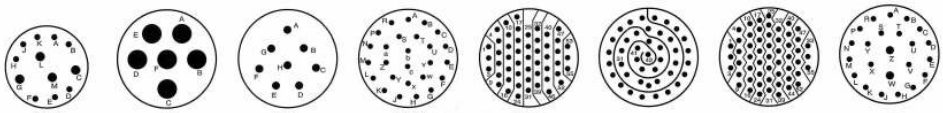

Series Ⅲ	15-97	17-6	17-8	17-26	17-35	-	-	-
Series Ⅱ	14-97	16-6	16-8	16-26	16-35	16-42	16-55	16-99
Series Ⅰ	15-97	17-6	17-8	17-26	17-35	-	17-55**	17-99**
No. of Contacts	8 #20, 4 #16	6 #12	8 #16	26 #20	52 #22D	42 #22	55 #2M	21 #20, 2#16
Service Ratings	I	I	II	I	M	M	M	I

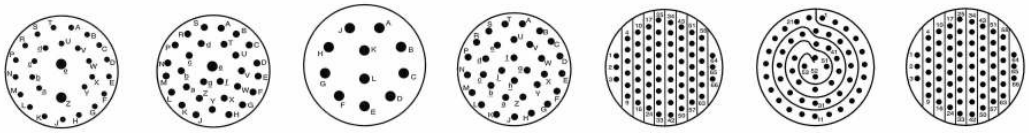

Series Ⅲ	-	-	19-11	19-32	19-35	-	-
Series Ⅱ	18-28	18-30	18-11	18-32	18-35	18-53	18-66
Series Ⅰ	19-28**	19-30**	19-11	19-32	19-35	-	19-66**
No. of Contacts	26 #20, 2 #16	29 #20, 1 #16	11 #16	32 #20	66 #22D	53 #22	66 #22M
Service Ratings	I	I	II	I	M	M	M

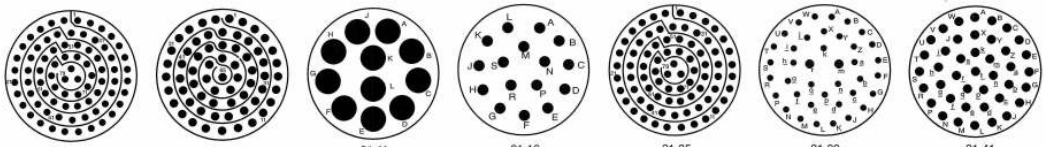

Series Ⅲ	-	-	21-11	21-16	21-35	21-39	21-41
Series Ⅱ	21-1	20-2	-	20-16	20-35	20-39	20-41
Series Ⅰ	21-1**	-	21-11	21-16	21-35	21-39	21-41
No. of Contacts	79 #22M	65 #22	11 #12	16 #16	79 #22D	37 #20, 2 # 16	41- #20
Service Ratings	M	M	I	II	M	I	I

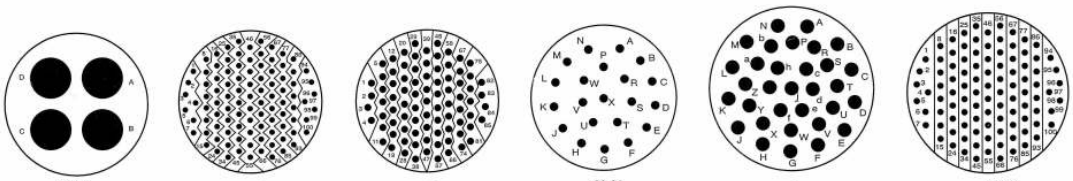

Series Ⅲ	21-75	-	-	23-21	-	23-35
Series Ⅱ	-	21-1	22-2	22-21	22-32	22-35
Series Ⅰ	21-75**	23-1**	23-2**	23-21	23-32	23-35
No. of Contacts	4 #8 Twinax	100 #22M	85 #22M	21 #16	32 #20	100 #22D
Service Ratings	M	M	M	II	I	M

Please consult factory for availability of layouts not shown.

● Contact Arrangements (Engaging View Pin Insert)

* Socket insert only
** Pin insert only (Not available in socket insert Series I and II)

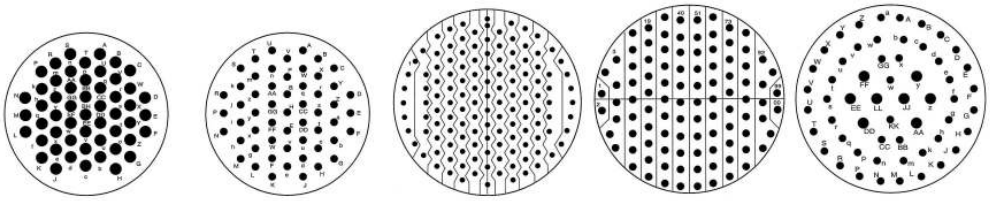

Series III	22-53	23-55	-	-	25-4
Series II	22-53	22-55	24-1	24-2	24-4
Series I	23-53	23-55	25-1**	25-2**	25-4
No. of Contacts	53 #20	55 #20	128 #22M	100 #22	48 #20, 8 #16
Service Ratings	I	I	M	M	I

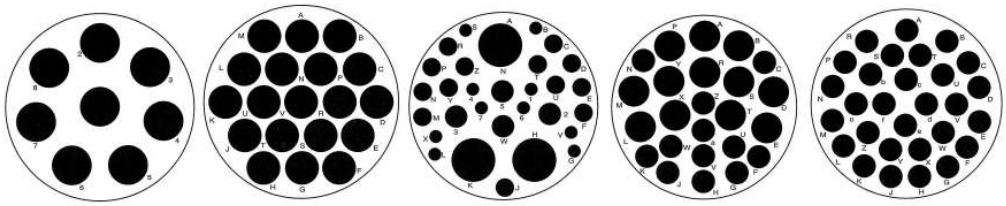

Series III	25-8	25-19	25-20	25-24	25-29
Series II	-	-	-	24-24	24-29
Series I	25-8*●	25-19	25-20*●	25-24	25-29
No. of Contacts	8 #8 Coax/Twinax	19 #12	3 #8 Twinax, 13 #16 4 #12 Coax, 10#20	12 #16, 12 #12	29 #16
Service Ratings	Coax	I	N	I	I

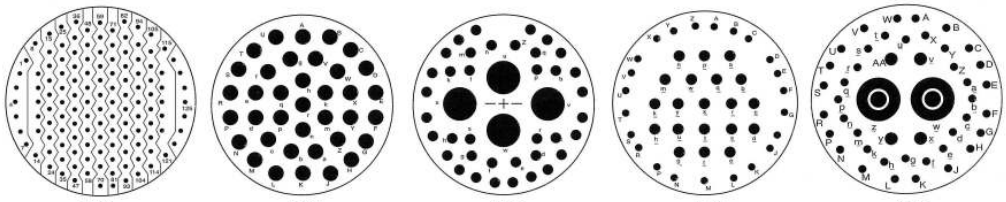

Series III	25-35	25-37	25-42	25-43	25-46
Series II	24-35	-	-	-	-
Series I	25-35	25-37*●	25-42 ●	25-43	25-46
No. of Contacts	128 #22D	37 #16	38 #20, 4 #8 Coax	23 #20, 20 #16	40 #20, 4 #16, 2 #8
Service Ratings	M	I	I , Coax	I	Coax

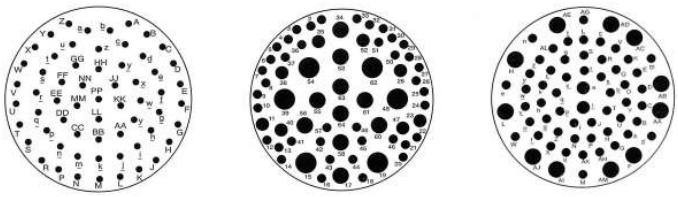

Series III	25-61	25-64*	25-66*
Series II	24-61	-	-
Series I	25-61	25-64 ●	25-66 ●
No. of Contacts	61 #20	40 #22D, 8 #20 10 #16, 6 #12	53 #22D, 2 #20, 11 #16
Service Ratings	I	I	I